US_CA_UK_FR_ES_PT_DE_IT_RO_PL

Outsunny

IN260800326V01

845-893V05

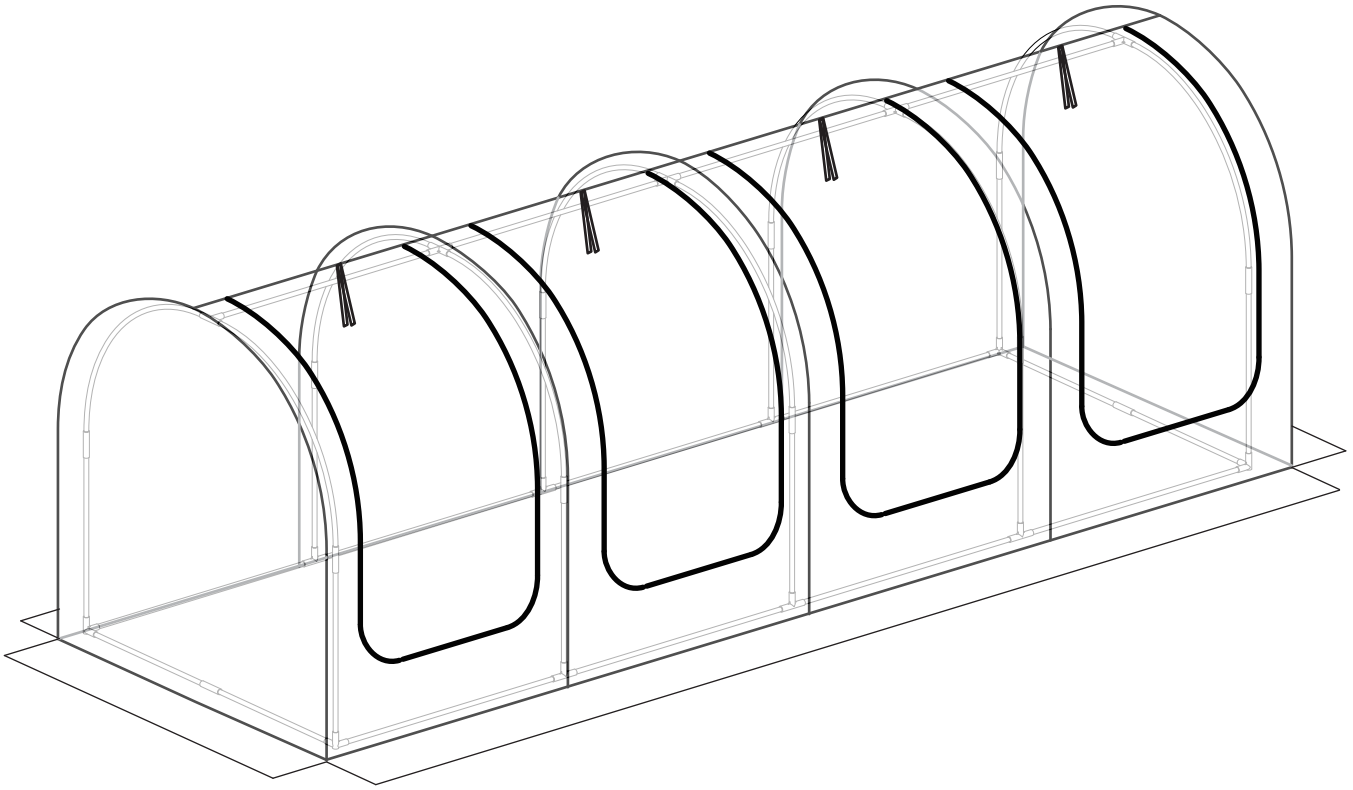

5
STEPS

1HR

***EN*_IMPORTANT, RETAIN FOR FUTURE REFERENCE: READ CAREFULLY.**

***FR*_IMPORTANT : A LIRE ATTENTIVEMEN ET A CONSERVER POUR VOUS Y REFERER ULTERIEUREMENT**

***ES*_IMPORTANTE, LEA Y GUARDE PARA FUTURAS REFERENCIAS.**

***PT*_IMPORTANTE, RETAR PARA REFERÉNCIA FUTURA: LEIA ATENTAMENTE.**

***DE*_WICHTIG! SORGFÄLTIG LESEN UND FÜR SPÄTER NACHSCHLAGEN AUFBEWAHREN.**

***IT*_IMPORTANTE! CONSERVARE IL PRESENTE MANUALE PER FUTURO RIFERIMENTO E LEGGERLO ATTENTAMENTE.**

***RO*_IMPORTANT, PĂSTRAȚI PENTRU REFERINȚĂ VIITOARE: CITIȚI CU ATENȚIE.**

***PL*_WAŻNE, PRZECHOWAJ DO WYKORZYSTANIA W PRZYSZŁOŚCI: PRZECZYTAJ UWAŻNIE.**

PARTS

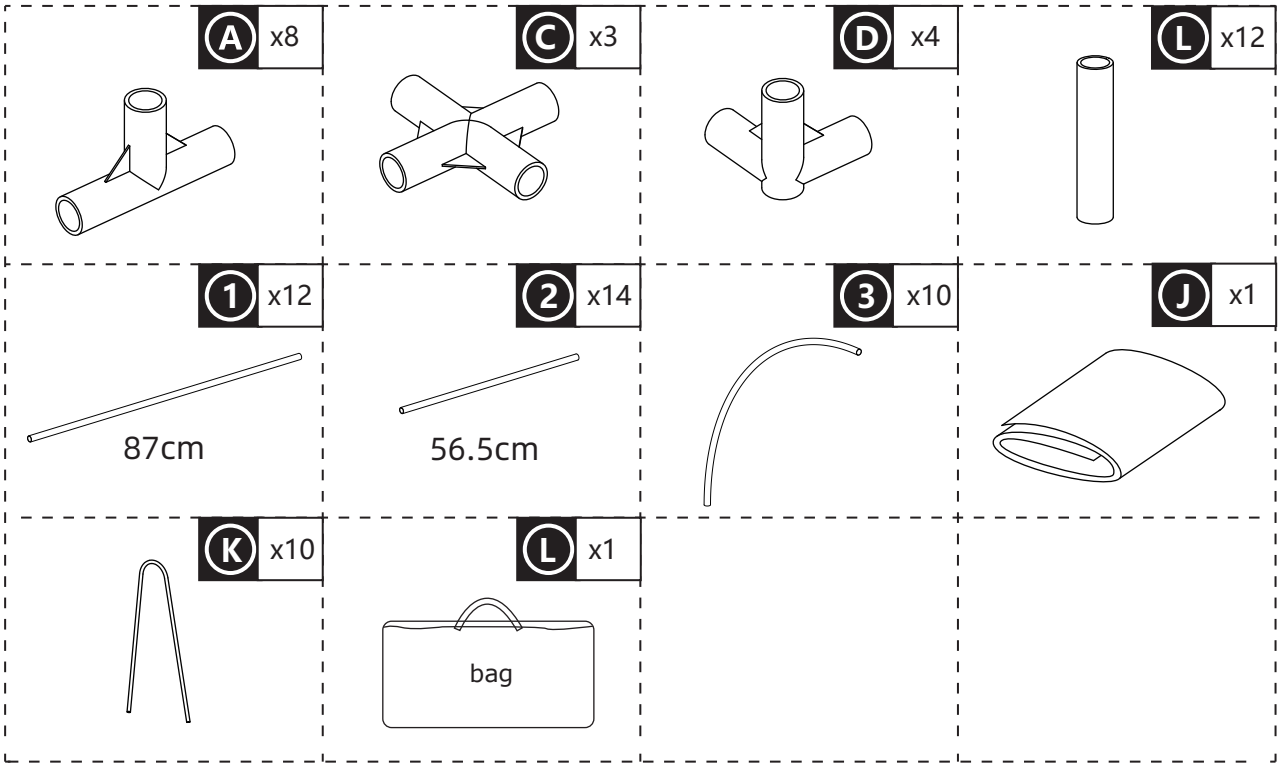

01

1 x8 2 x4 A x6 D x4 L x2

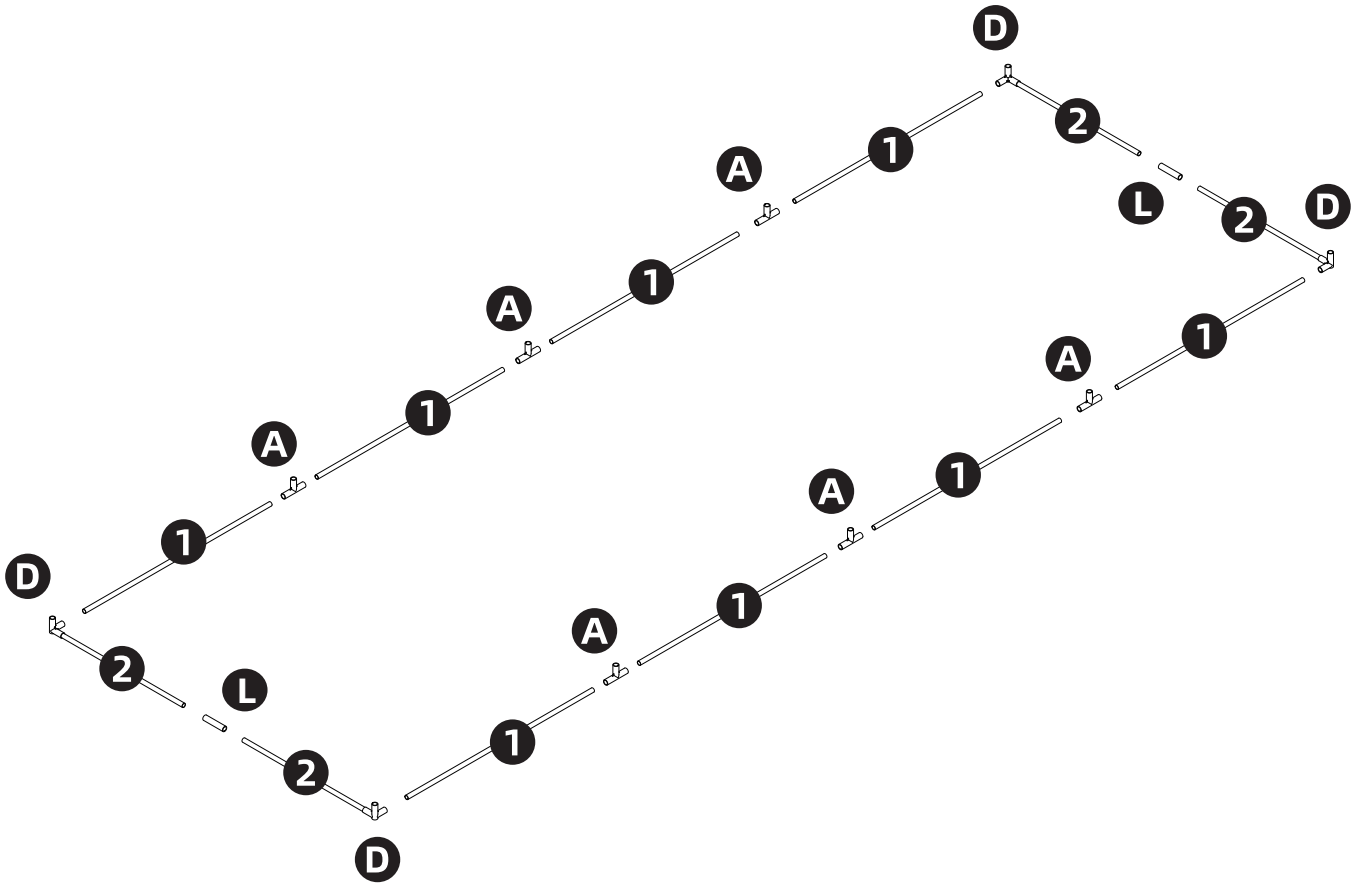

2 x10

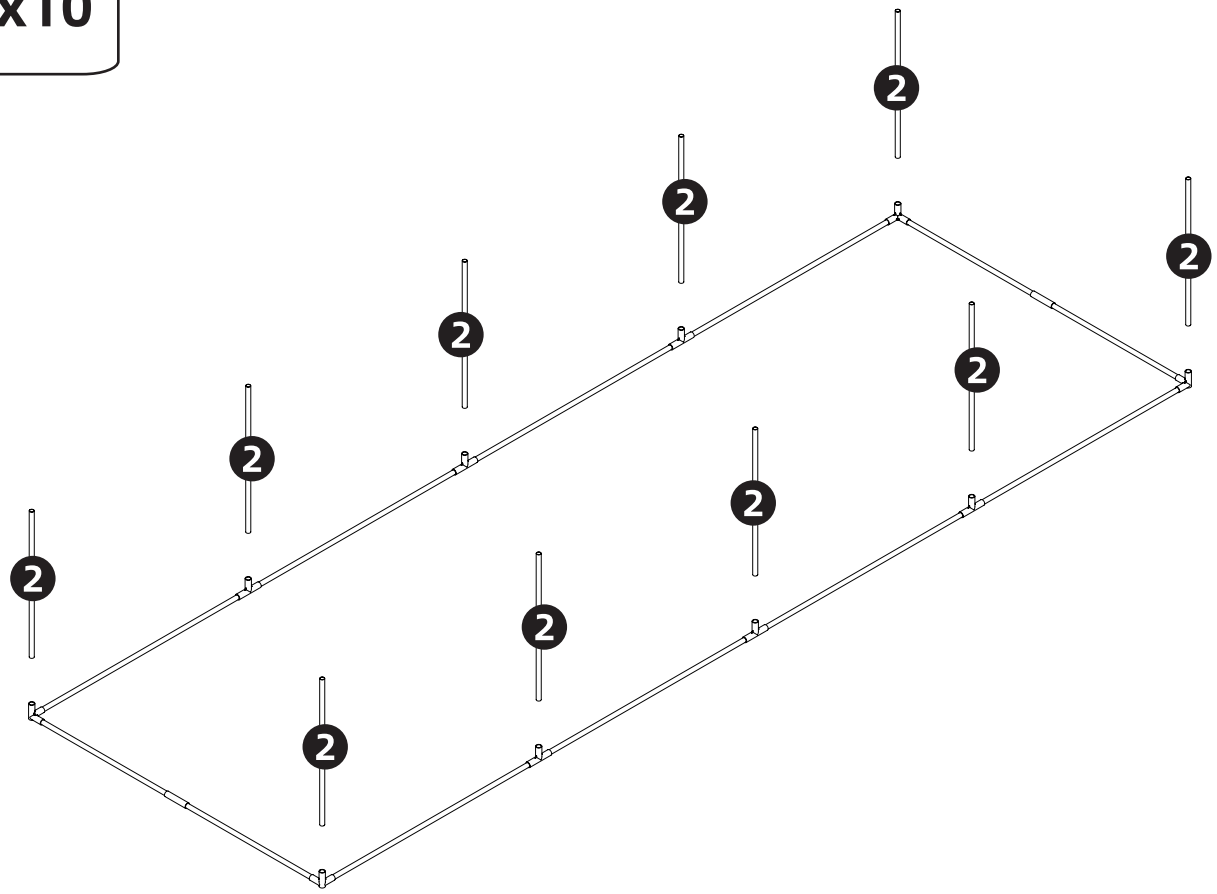

1 x4 3 x10 A x2 C x3

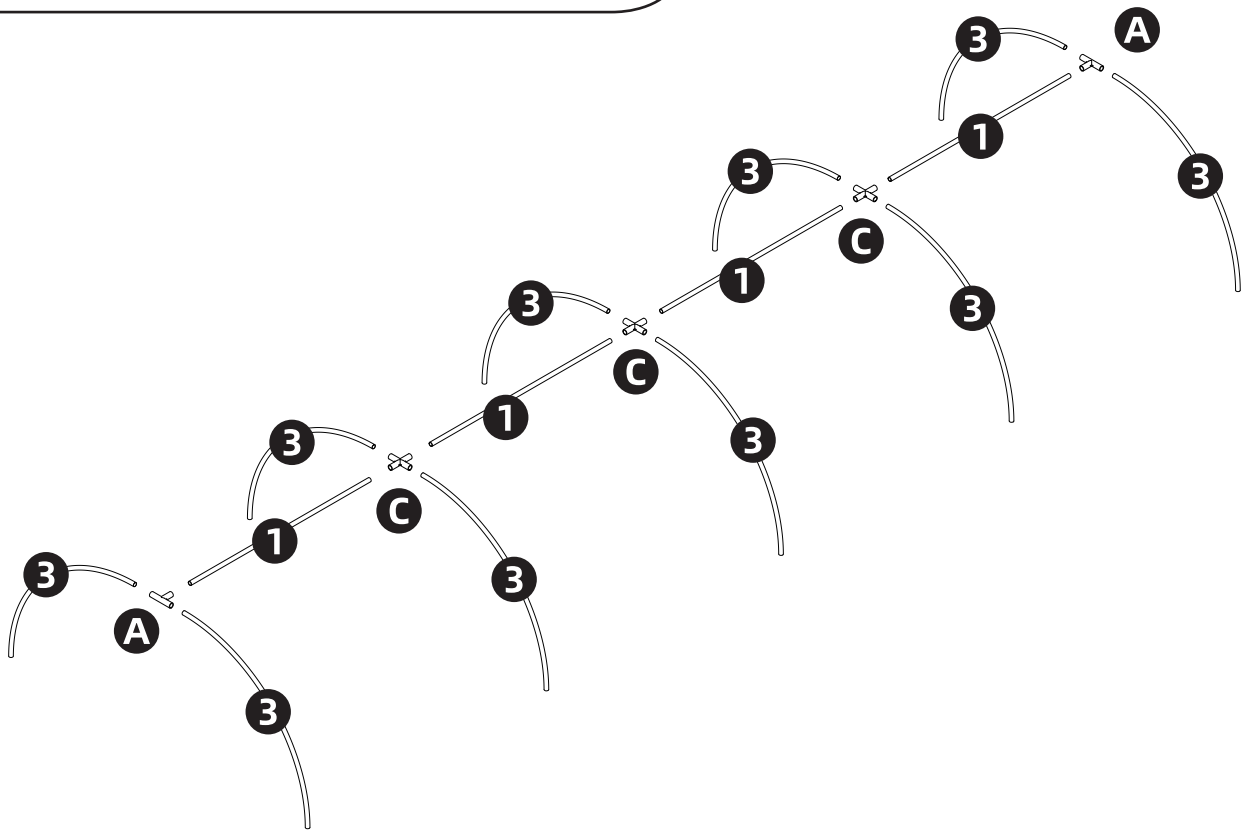

L x10

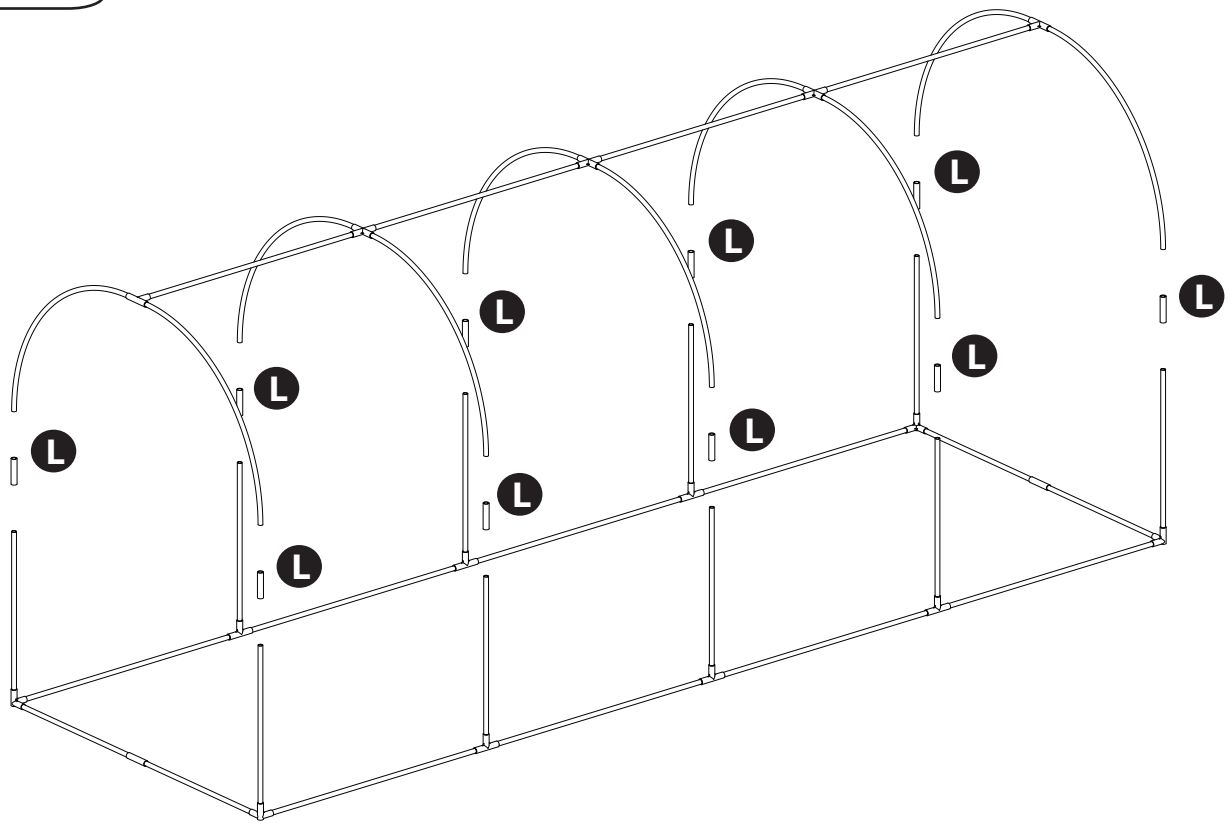

J x1 **K** x10

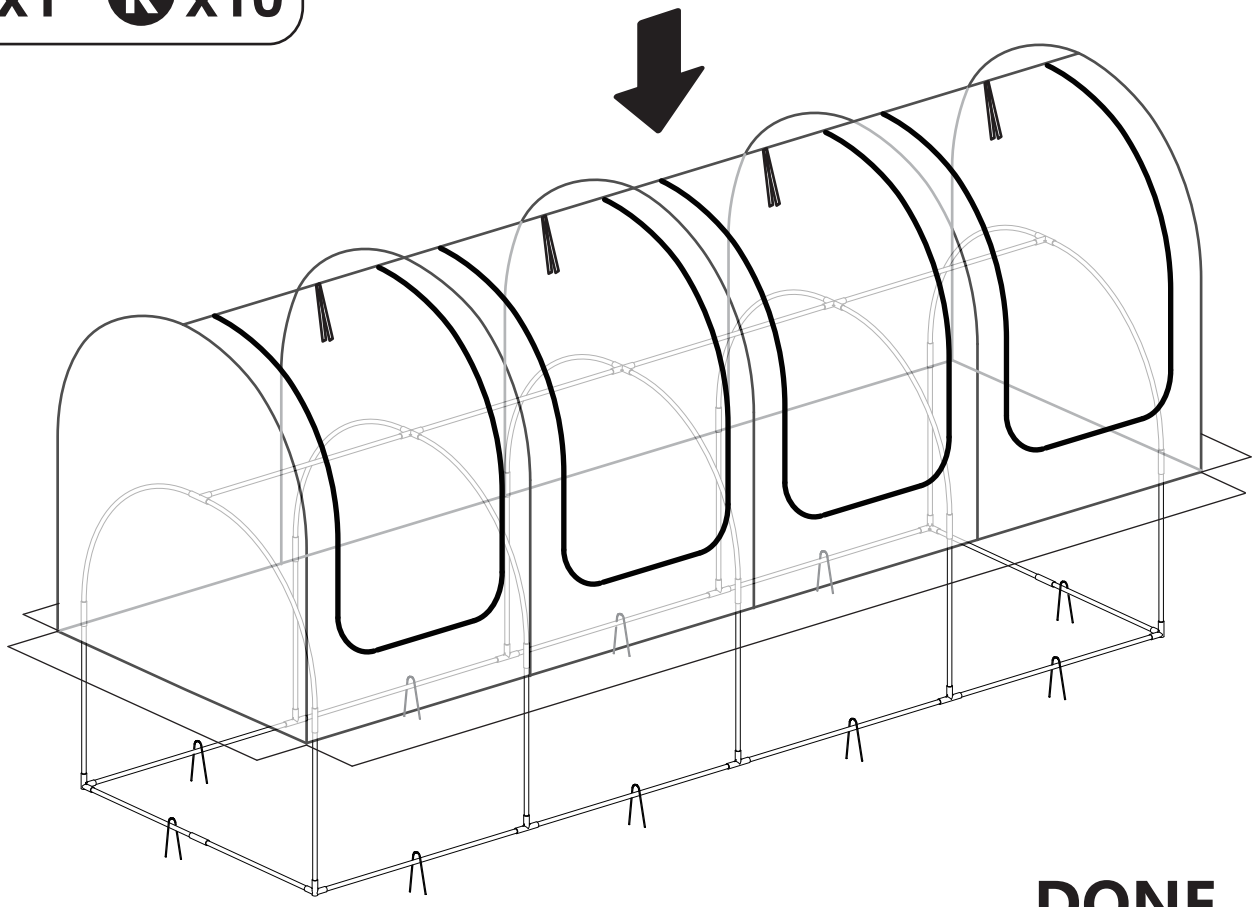

DONE

US

If you have any questions, please contact our customer care center, Our contact details are below:

001-877-644-9366

customerservice@aosom.com

Imported by Aosom LLC
7777 Center Ave. Suite 430
Huntington Beach, CA 92647-9998 USA
MADE IN CHINA

CA

If you have any questions, please contact our customer care center, Our contact details are below:

416-792-6088

customerservice@aosom.ca

Imported by Aosom Canada Inc.
Unit 33-1 Sparks Avenue, North York, Ontario, Canada
M2H 2W1
MADE IN CHINA

Si vous avez la moindre question, veuillez contacter notre centre d'assistance à la clientèle,Nos coordonnées sont les suivantes:

416-792-6088

customerservice@aosom.ca

Importé par Aosom Canada Inc.
Unité 33-1 Sparks Avenue, North York, Ontario, Canada M2H 2W1
Fabriqué en Chine

ES

Si tiene alguna pregunta, comuníquese con nuestro Centro de Atención al Cliente,Nuestros datos de contacto son los siguientes:

0034-931294512

atencioncliente@aosom.es

IMPORTADOR/Fabricante/REP:
SPANISH AOSOM, S.L.
C/ROC GROS,Nº15.08550, ELS HOSTALETS DE BALENYÀ, SPAIN.
B66295775
HECHO EN CHINA

Se tiver alguma dúvida, por favor contacte o nosso Centro de Atendimento ao Cliente,Os nossos dados de contacto são os seguintes:

0034-931294512

info@aosom.pt.

UK

If you have any questions, please contact our customer care center, Our contact details are below:

0044-800-240-4004

enquiries@mhstar.co.uk

IMPORTER ADDRESS:
MH STAR UK LTD
1 Northampton Cross Logistics Park
Northampton Cross Road
Northampton
Nn4 9FH
Tel: 0800 240 4050
enquiries@mhstar.co.uk
MADE IN CHINA

DE

Wenn Sie Fragen haben, wenden Sie sich bitte an unser Kundendienstzentrum,Unsere Kontaktdaten stehen unten:

0049-0(40)-87408465

service@aosom.de

ADRESSE DES IMPORTEURE/Hersteller/REP:
MH Handel GmbH
Wendenstraße 309
D-20537 Hamburg
Germany
IN CHINA HERGESTELLT

IT

In caso di dubbio, si prega di contattare il nostro centro assistenza clienti,I nostri dettagli di contatto sono di seguito:

0039-0249471447

clienti@aosom.it

IMPORTATO DA/Produttore/REP:
AOSOM Italy srl
Centro Direzionale Milanofiori
Strada 1 Palazzo F1
20057 Assago (MI)
P.I.: 08567220960
FATTO IN CINA

RO

Importator/Producător/REP:
Aosom Romania SRL
Str. Barbu Mumuleanu, nr. 30-32
Bucuresti, Sector 2
Tel: +40 312294730
clienti@aosom.ro
Fabricat in China

FR

Si vous avez la moindre question, veuillez contacter notre centre d'assistance à la clientèle,Nos coordonnées sont les suivantes:

0033-1-84166106

aosom@mhfrance.fr

Importé par/Fabricant/REP:
MH FRANCE
2 Rue Maurice Hartmann
92130 Issy Les Moulineaux
France
FABRIQUÉ EN CHINE

