AIYAPLAY

IN260700083V01_UK_370-544V70

CHILDREN'S
ELECTRIC TOY CAR

Assembly & User Instructions - Please keep for future reference

EN

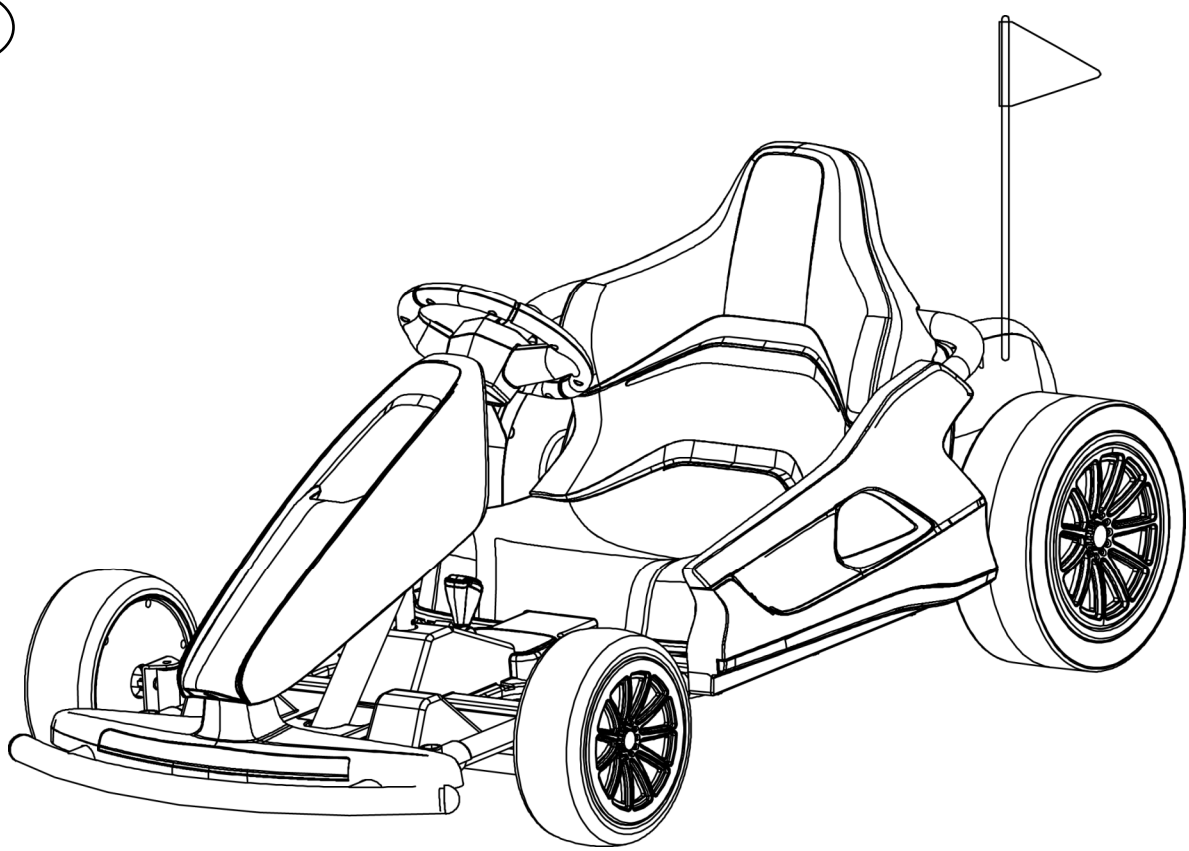

Picture for reference only. Please refer to real object.

Important	Warning!
Age: 6Years + Maximum user weight: 60kg	1. For family and domestic use only 2. Not to be used in traffic 3. Adult assembly required

Important - Please read these instructions fully before assembly or use

These instructions contain important information which will help you to get the best from your product and ensure safe and correct assembly, use and maintance.

Table of Contents

1. About Your New Vehicle

2. Safety Information

3. Parts List

4. Parts Diagram

5. Assembly Steps

6. How To Operate Your Vehicle

7. Charging The Vehicle

8.. Troubleshooting Guide

9. Maintaining Your Vehicle

10.Disposal Of Battery

About Your New Vehicle

Thank you for purchasing our products, we want your child to enjoy this product for years to come.

Keep these points in mind as you read this guide:

Suitable age:	6 years+	**Battery:**	24V7ah∗1
Load Capacity:	Under 60Kg	**Motor:**	24V775 (19000rpm)∗2
Speed:	5-8Km/h	**Charging time:**	6-8hours
Material:	PP	**Optimum Temperature:**	Below 40°C Avoid to use under burning sun
Charger:	24V0.6A		
	Output: 24V		
	Current: 600mA		

Safety Information

⚠ WARNING!

• General safety:

• Where products need assembly they must always be assembled by an adult.As a parent/carer, it is also your responsibility to check the tightness of screws, nuts and bolts before each use and if necessary, adjust and re-tighten.
• This product may contain small parts and it is your responsibility as a parent/carer to exclude children from the area during assembly due to small parts.
• Remove protective material and poly bags and dispose of them responsibly before giving the assembled product to your child.
• Remember to retain these instructions for future reference.
• We have tried to make our toys as simple as possible to assemble but inevitably there will be one or two slightly more complex tasks.

Positioning :

- Do not allow your child to ride at night or in poor light conditions.
- Do not let your child play near steps, swimming pools / spas or other sources of water, on slopes,on streets or around cars, even if parked on your own property.
- It is prohibited to drive/use this product on the public highway.
- This product is designed to be used on smooth surfaces and should not be used on soft ground or in the rain or snow.

Before use:

• Very Important. You Must Charge & Connect The Battery Before First Use.
• Dispose of all packaging material responsibly before giving this product to your child.
• Check tightness of all components before giving this product to your child.

During use:

- This product is only suitable for children 6years and older.
- The toy should be used with caution since skill is required to avoid falls or collisions causing injury to the user or third parties.
- The maximum rider weight capacity for this product is 60Kg. Do not overload.
- Adult supervision is highly recommended when children play with wheeled toys. Your child's safety is your concern.
- Do not allow the child to ride with bare feet or without suitable footwear.
- Ensure the child keeps clothing, hands, hair,fingers and feet away from moving parts.
- The use of protective gear including approved helmets, gloves and pad is recommended.
- Store this product at room temperature; do not leave it outside or uncared for.
- Never let any child play with the battery or charger at any time, or let them charge the product.
- Do not use if product is faulty or damaged.
- Do not tamper with the battery or electrical parts inside the product.

Safety Information

⚠ WARNING!

- **Charging the battery:**

- All charging and re-charging must be carried out by an adult.
- Do not attempt to use the product while it is being charged.
- Charging should be carried out under cover and in a well-ventilated area.
- Always ensure the charger is switched off before connecting it to the product/battery.
- Always ensure the charger is plugged into a wall outlet .Do not use an extension.
- Do not charge near sources of potential sparks, fires or flames or where flammable gases, liquids and materials are stored.
- During charging the battery and the charger may get hot.
- Only charge the battery for a maximum time of 8 - 12 hours.
- Do not leave the charger plugged into an outlet or connected to the product/battery once charging is completed.
- Never attempt to recharge a fully charged or partially used battery for an extra boost.
- Do not over-charge; this action will significantly shorten battery life.
- Always ensure that once the battery becomes discharged/flat that you re-charge for the recommended time. Failing to do so will significantly shorten battery life.
- Charging the product below 4°C (40°F) or above 40°C (104°F) will decrease the battery life significantly.
- V.R.L.A. batteries are heavy and contain lead & acid. They are dangerous if improperly handled.
- Only use the charger supplied with the product.The use of other chargers may cause damage to the battery and/or cause explosion.
- Battery chargers used with the toy are to be regularly examined for damage to the cord, plug,enclosure and other parts, and in the event of such damage, they must not be used until the damage has been repaired.
- Only use the battery supplied with this product.The use of other batteries may cause damage to the motor, charger and subsequent wiring,which could lead to fire and/or explosion.
- Exhausted batteries are to be removed from the toy.
- Always ensure that you connect the battery with the correct polarity.
- Never short-circuit the terminals of the battery,or any subsequent wiring.
- Never bypass or bridge a broken/blown fuse or circuit breaker and always replace with the same type/value and model.

Parts List

PART NO	PART NAME	PICTURE	Q'ty (pcs)	REMARKS	PART NO	PART NAME	PICTURE	Q'ty (pcs)	REMARKS
1	Vehicle body	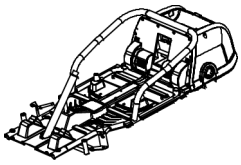	1		2	Baffle A	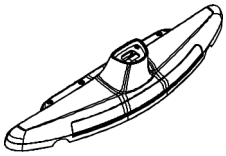	1	
3	Baffle B	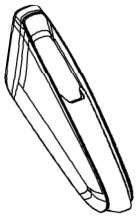	1		4	Decorative cover	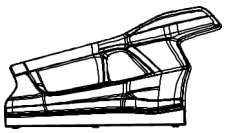	1 pair	Left & right
5	Seat	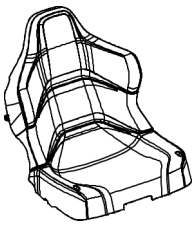	1		6	Steering wheel	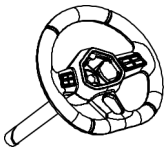	1	
7	Cover	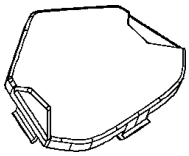	1		8	Driving wheel	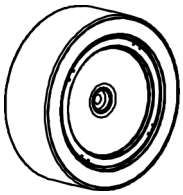	2	
9	Wheel hub A		2		10	Wheel		2	
11	Wheel hub B		2		12	Bumper		1	
13	Rear axle	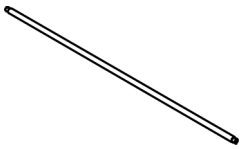	1		14	Bogie	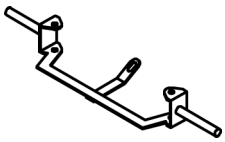	1	

Parts List

PART NO	PART NAME	PICTURE	Q'ty (pcs)	REMARKS	PART NO	PART NAME	PICTURE	Q'ty (pcs)	REMARKS
15	Fixing part A	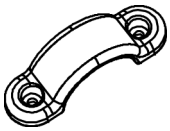	1		16	Fixing part B		4	
17	Flag		1		18	Instruction manual		1	
19	Charger	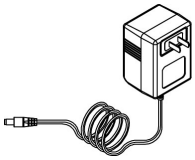	1		20	Spanner A	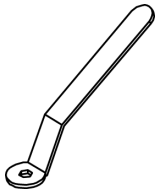	1	
21	Spanner B	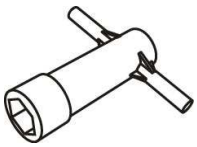	2		22	Spanner C	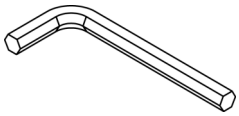	1	M6
23	Spanner D	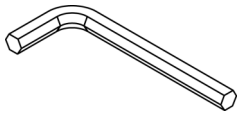	1	M10	24	Spanner E	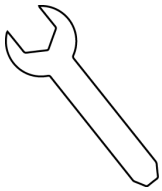	1	M19
25	Spanner F	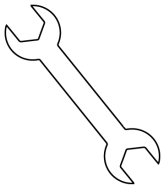	1	M10~13					

Parts List

Screw Assembly package			
A	M4X12 Screw	9	**Install the baffle**
B	M4X12 Screw	14	**Install the decorative cover.**
C	M4X12 Screw	4	**Install the seat.**
D	M4X12 Screw	1	**Spare**

Pre-assambled Screw List			
A	M10 Nut and Washer Set	2	**Rear Axle**
B	M12x90 Bolt and Nut Set	2	**Bogie**
C	M10 Nut and Washer Set	2	**Bogie (Front Axle)**
D	M8x35 Bolt and Nut Set	2	**Car Body**
E	M4x12 Screw	2	**Power Supply Hood**
F	Sleeve Bushing	2	**Bogie**

Parts Diagram

1	Vehicle body ∗1	2	Baffle A ∗1
3	Baffle B ∗1	4	Decorative cover ∗2
5	Seat ∗1	6	Steering wheel ∗1
7	Cover ∗1	8	Driving wheel∗2
9	Wheel hub A ∗2	10	Wheel ∗2
11	Wheel hub B ∗2	12	Bumper ∗1
13	Rear axle ∗1	14	Bogie ∗1
15	Fixing part A ∗4	16	Fixing part B ∗4
17	Flag ∗1		

NOTE: Some Parts Shown are assembled on both sides of vehicle

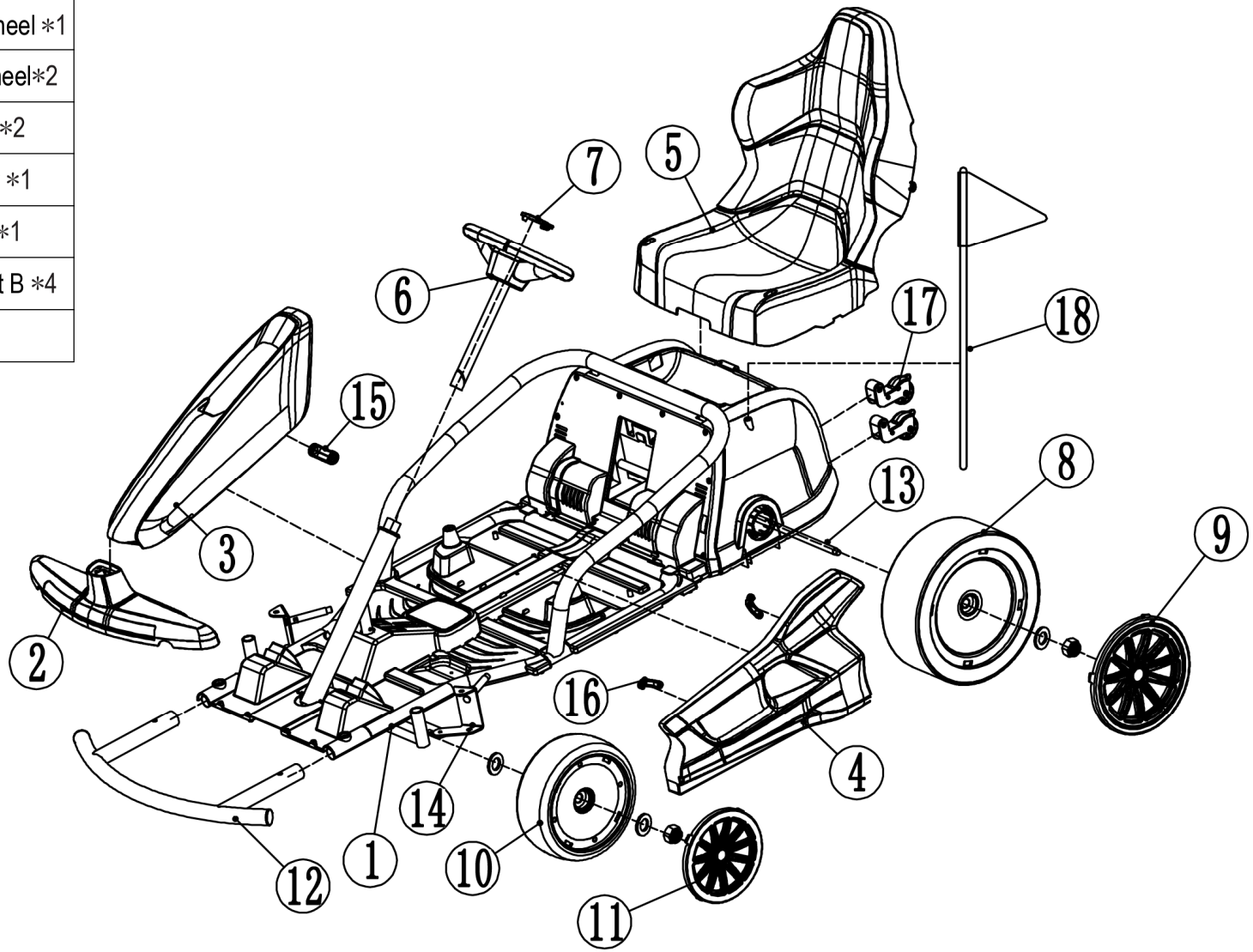

Assembly Steps

1.Install the rear axle and back wheels .

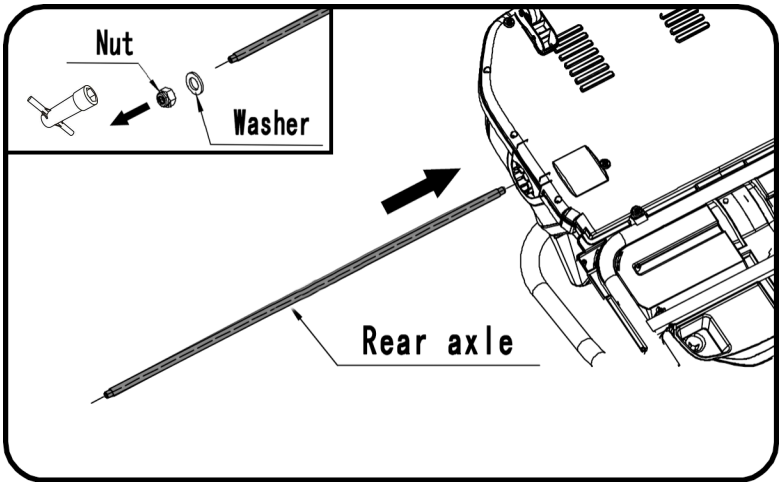

- As shown in the picture, disconnect the rear axle parts, remove the nut and washer with spanner.
- Then put the rear axle through the car body.

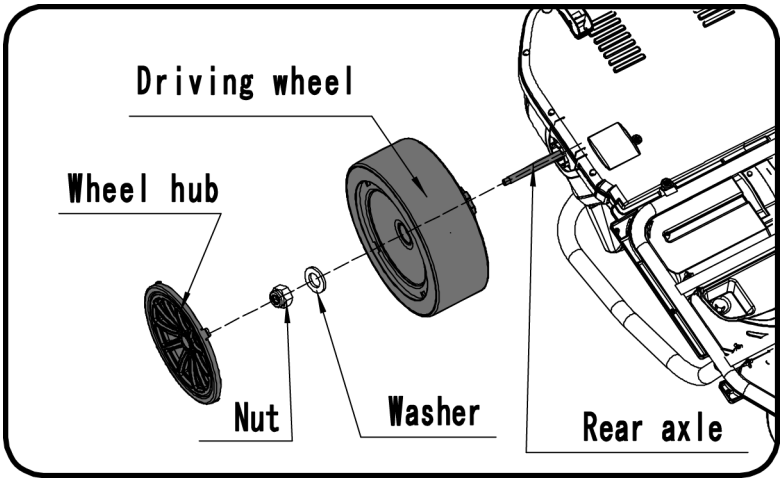

- Install the driving wheel through the rear axle and fix it with washer and nut, then install the wheel hub.
- Do the same on the other side.

Assembly Steps

2.Install the bogie.

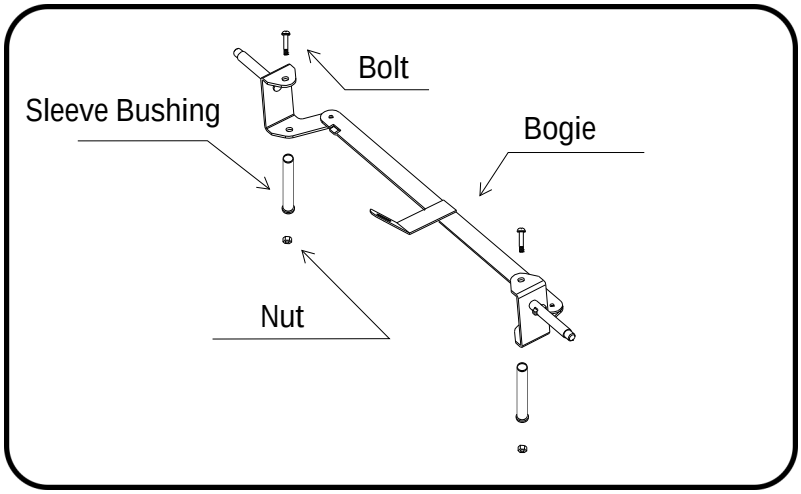

- As shown in the picture, first remove the bolt, nut and sleeve bushing from the bogie

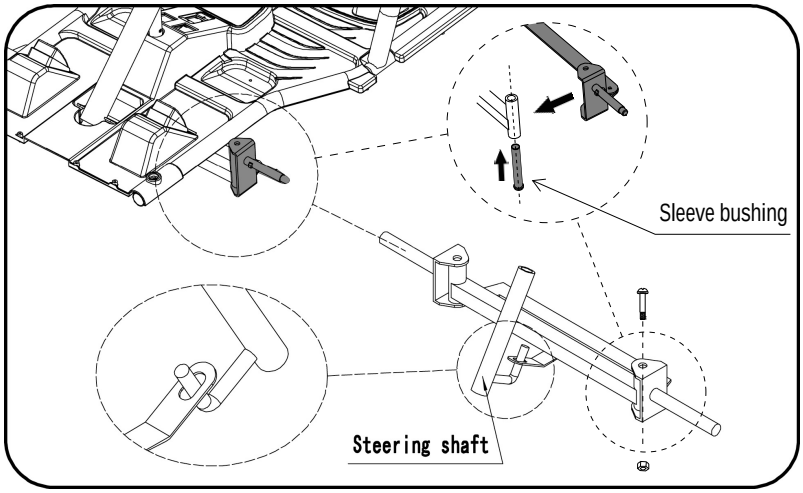

- As shown in the picture, flip the car, insert the sleeve bushing into the tube, then install the bogie to the corresponding place, and fasten with bolt and nut.

Assembly Steps

3. Install the front wheel .

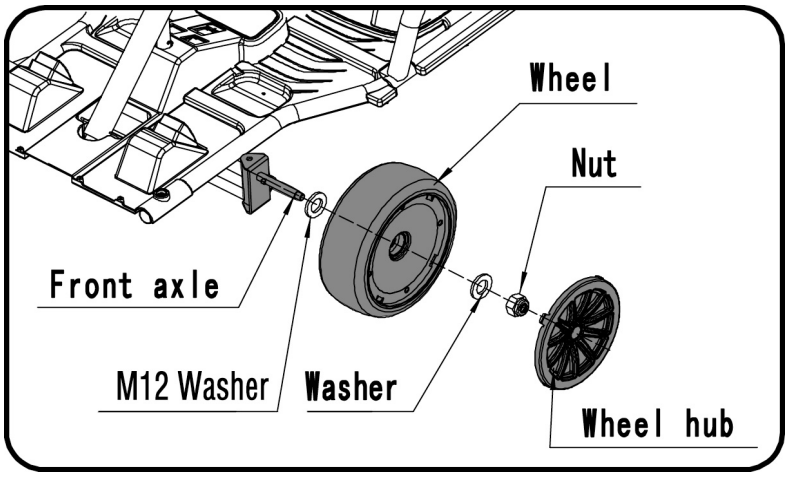

- As shown in the picture, first remove the nut and washer on the front axle, the bigger M12 washer on the inside remains.
- Put the front wheel through the axle and fasten with washer and nut, then fix the wheel hub.
- Do the same on the other side.

4.Install the bumper.

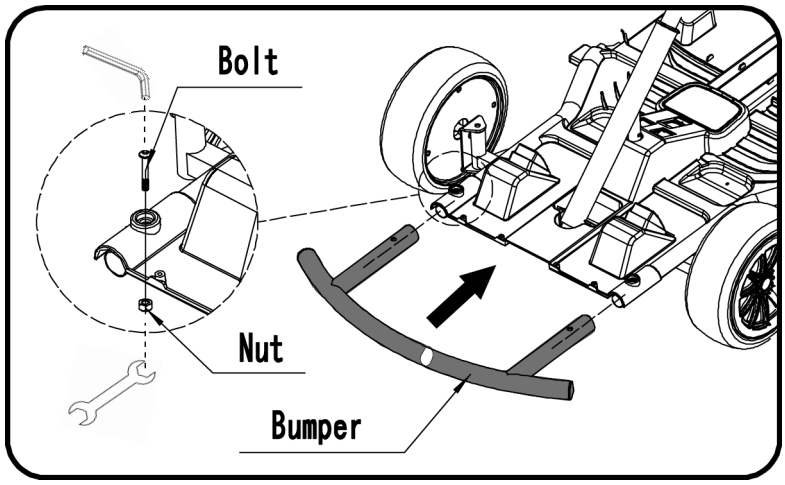

- Remove the bolt and nut on the car body.
- As showen in the picture, install the bumper to the corresponding place, and fasten with the bolt and nut.

Assembly Steps

5. Install the baffle .

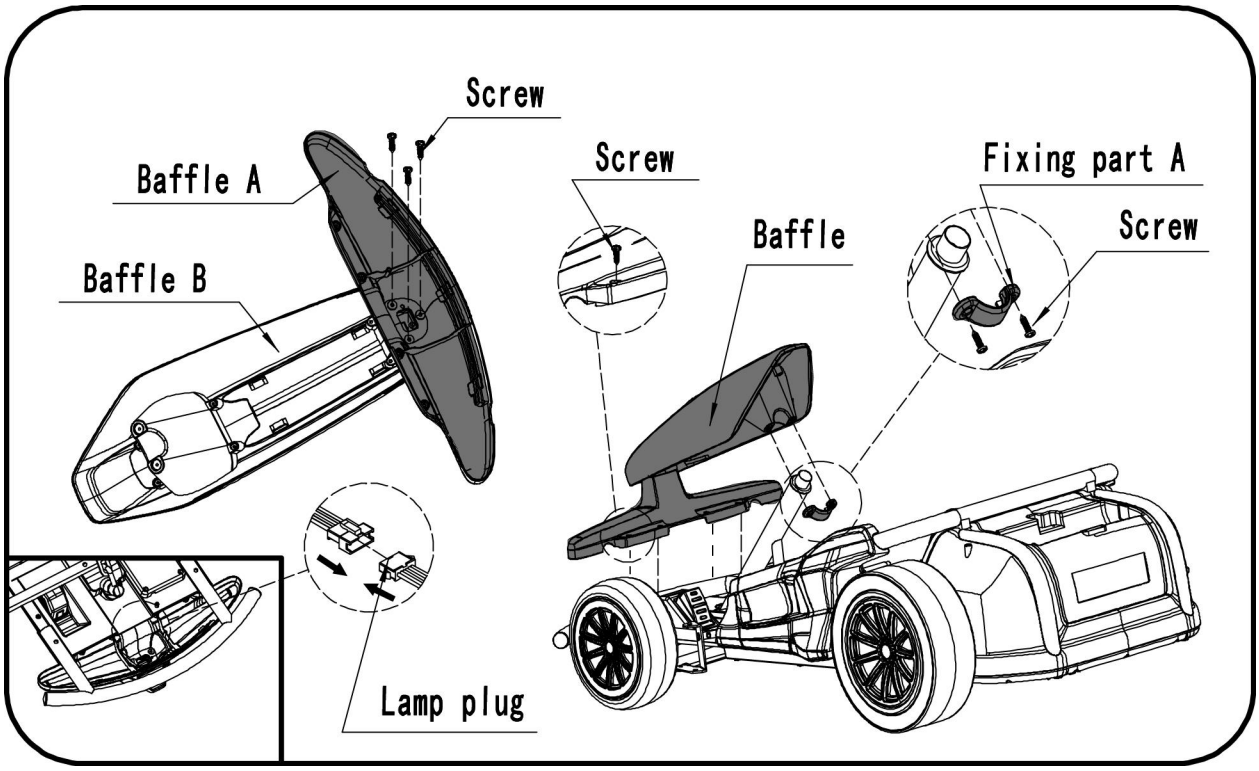

- As shown in the picture, install baffle B to baffle A, and fasten with the screws.
- As shown in the picture, install baffle to the corresponding place, and fasten with the fixing part A and screws, and 4 more screws at the bottom, then conect the lamp plug butt.

Assembly Steps

6.Install the decorative cover.

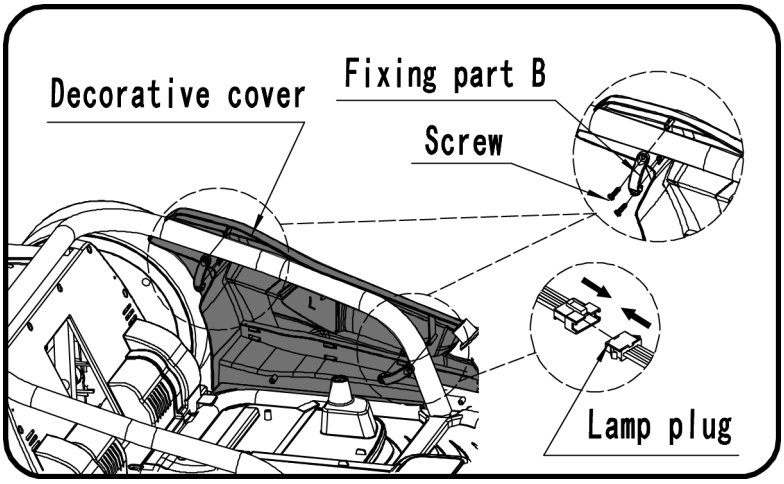

- As showed in the picture,install the decorative cover to the corresponding place, and fasten with the fixing part B and screws.
- The lamp plug butt.
- The other side is same as above.

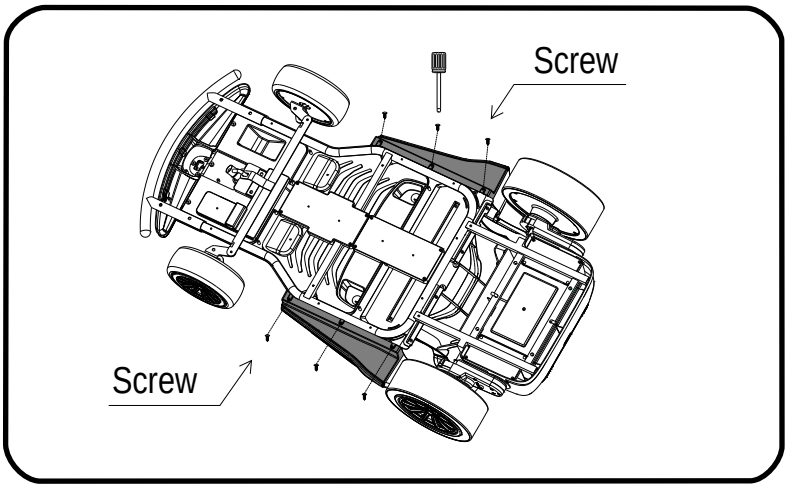

- Flip the car, align the decorative cover with the corresponding holes on the metal frame, then fasten with 3 screws on each side as shown in the picture.

7. Install the seat.

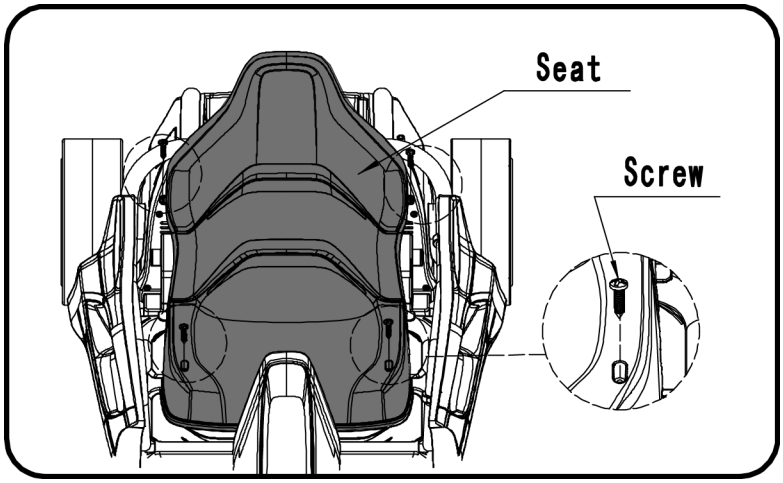

- As showed in the picture,install the seat to the corresponding place, and fasten with the screws.

Assembly Steps

8. Install the steering wheel.

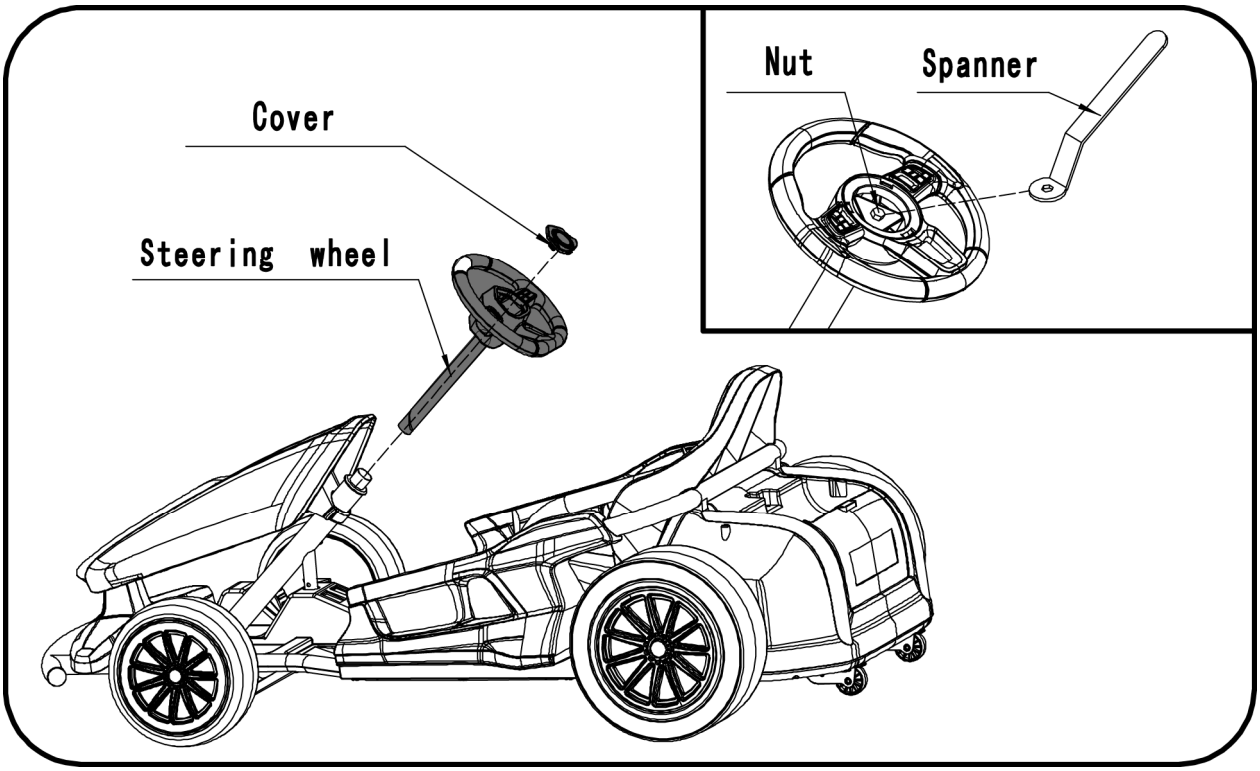

- As showed in the picture, press the steering wheel,Adjust the height well and fasten with the nut.
- Fasten the nut with spanner.
- As showed in the picture, install the cove.

Assembly Steps

9. Install the flag.

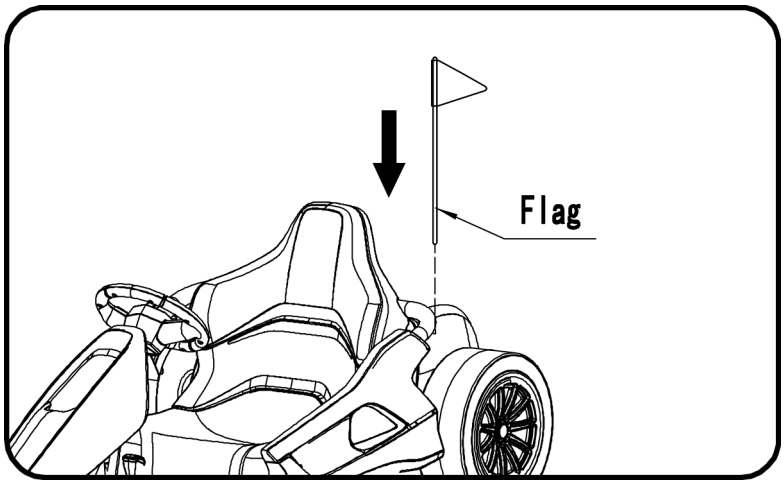

- As showed in the picture, press the flag downward to fix it.

10.Connect the power supply.

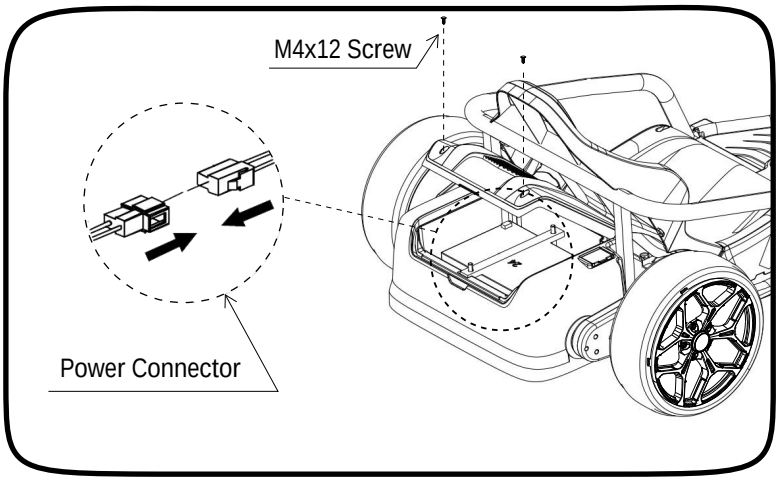

- As shown in the picture, remove the screw and open the hood. Then plug the power connector into the terminal on the battery.
- Close the hood and fasten the screw.

How To Operate Your Vehicle

Use Operation(Ensure the power switch has been turned on)

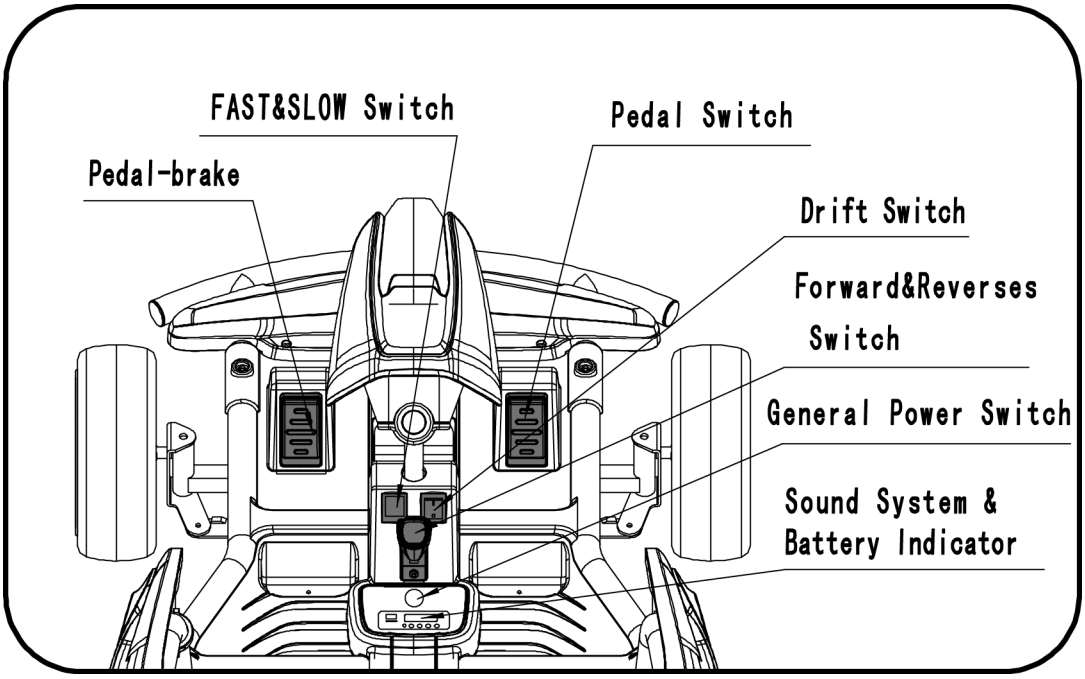

IMPORTANT!

Always stop vehicle when changing the speed or direction to avoid damage the gear box and motor.

(1)Turn on the power switch first, the sound can be played.

(2) Forward

Press the "Forward and Reverse switch" to the " ↑ " position.

Press the pedal.

The vehicle drives forward.

(3) Stop

Press the pedal-brake .

The vehicle stops .

(4) Reverse

Press the "Forward and Reverse switch" to the " ↓ " position.

Press the pedal.

The vehicle drives backward.

(5) Turn on the "FAST and SLOW Switch" , control the speed of the car.

(6) Turn on the "Drift Switch" , The car can drift.

How To Operate Your Vehicle

(7) How to use the Sound System & Battery Indicator

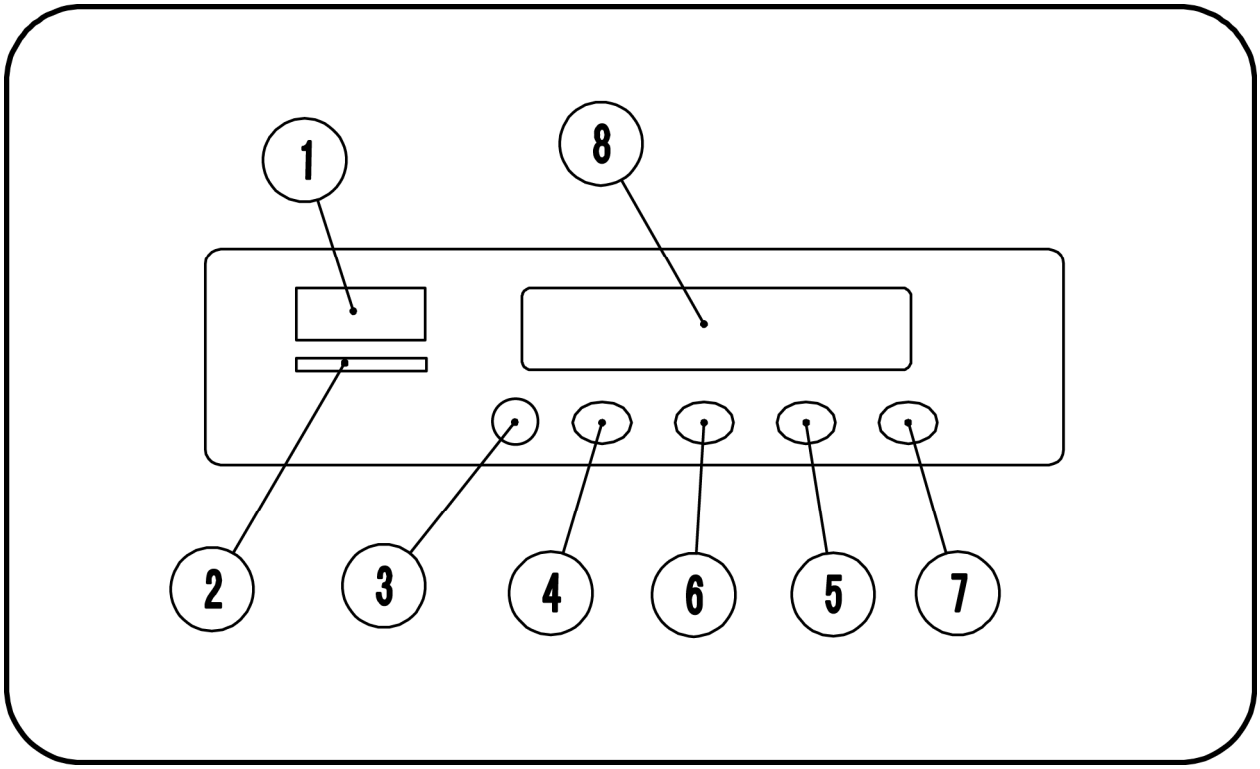

- 1. USB Storage device slot.
- 2. TF Storage device slot.
- 3.AUX Port
- 4.Decrease volume/Last Song: Switch songs.
- 5.Increase volume/Next Song: Switch songs.
- 6. SCAN Button: you can control the music play and pause.
- 7. MODE Button
- 8. Power Display: Shows battery power and charge level.

Charging Your Vehicle

ONLY AN ADULT CAN CHARGE AND RECHARGE THE BATTERY!

- non-rechargeable batteries are not to be recharged;
- different type of batteries or new and used batteries are not to be mixed;
- batteries are to be inserted with the correct polarity;
- exhausted batteries are to be removed from the toy;
- the supply terminals are not to be short-circuited.
- rechargeable batteries are only to be charged under adult supervision;
- rechargeable batteries are to be removed from the toy before being charged;
- The transformers or battery charger used with the toy are to be regularly examined for damage to the cord, plug, enclosure and other parts, and in the event of such damage, they must not be used until that damage had been repaired.

⚠ WARNING!

- **PREVENT FIRE AND ELECTRIC SHOCK:**
  - Use the only rechargeable battery and charger supplied with your vehicle. NEVER substitute the battery or the charger with another brand. Using another battery or charger may cause a fire or explosion.
  - Do not use the battery or charger for any other product. Overheating, fire or explosion could occur.
  - NEVER modify the electric circuit system. Tampering with the electric system may cause a shock, fire or explosion or my permanently damage the system.
  - Do not allow direct contact between battery terminals. Fire or explosion can occur.
  - Do not allow any type of liquid on the battery or its components.
  - Explosive gasses are created during charging. Do not charge near heat or flammable materials. Charge the battery in a well-ventilated area ONLY.
  - NEVER pick up the battery by the wires or charger. Damage can occur to the battery and may cause a fire. Pick up the battery by the case ONLY.
  - Charge the battery in a dry area ONLY.
- Battery posts, terminals and related accessories contain lead and lead compounds, chemicals known to the State of California to cause cancer and reproductive harm. **Wash hands after handling.**
- Do not open the battery. Battery contains lead acid and other materials that are toxic and corrosive.
- Do not open the charger. Exposed wiring and circuitry inside case may cause electric shock.

  Only adults may handle or charge the battery. NEVER allow child to handle or charge the battery.

  Battery is heavy and contains lead acid (electrolyte).

Charging Your Vehicle

⚠WARNING!

• PREVENT FIRE AND ELECTRIC SHOCK:

• Do not drop the battery. Permanent damage to the battery could occur or cause serious injury.
• Before charging the battery, check for wear or damage to the battery, charger, its supply cord and the connectors. DO NOT charge the battery if any damage to parts has occurred.
• Do not allow the battery to drain completely. Recharge the battery after each use or once a month if not used regularly.
• Do not charge battery upside down.
• Always secure the battery with the bracket. Battery can fall out and injure a child if vehicle tips over.
• A recommendation for adult supervision of young children.
• The toy should be used with caution since skill is required to avoid falls or collisions causing injury to the user or third parties.

• The charging input socket is BEHIND THE SEAT.
• The POWER SWITCH must be turned in OFF position when charging.
• Before the first use, you should charge the battery for 8-12 hours. Do not recharge the battery for more than 20 hours to avoid overheating the charger.
• When the vehicle begins to run slowly, recharge the battery.
• After each use or once a month minimum recharge time as 8 to 12 hours, no more than 20 hours.
• Battery packed in battery case could be taken out from the car for portable charging.

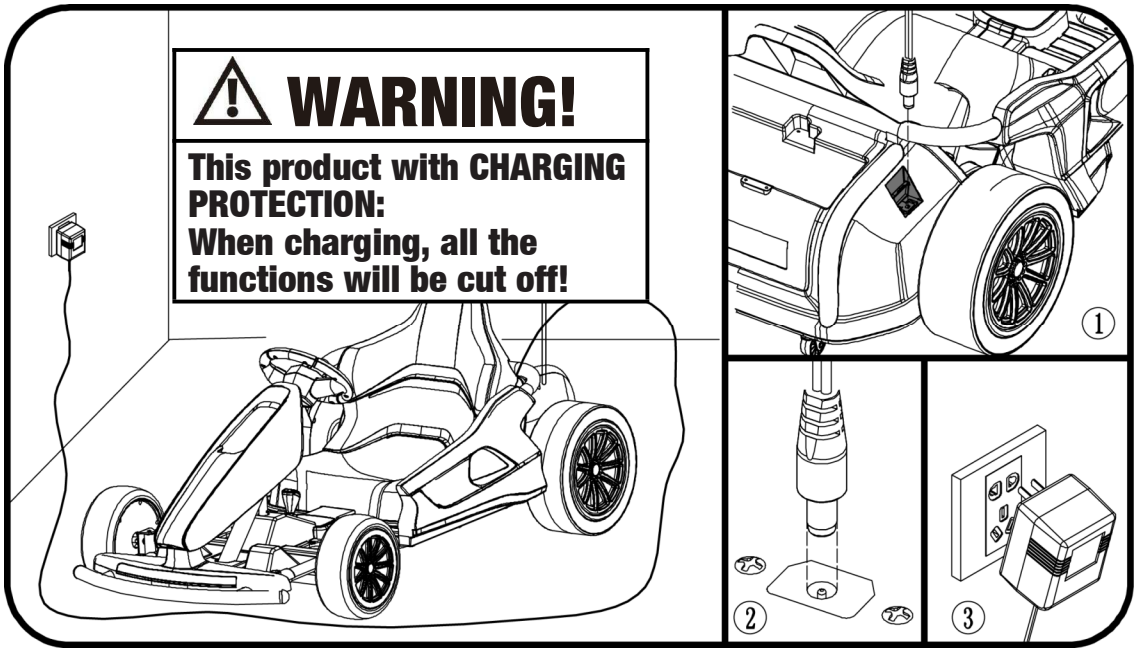

1. Find the charging input socket behind the seat ;
2. Plug the charger port into the input socket;
3. Plug the charger plug into a wall outlet. The battery will begin charging.

Troubleshooting Guide

■ PROBLEM: The vehicle does not run

PROBLEM CAUSE: The battery may low on power.

After each use, or once a month minimum, charge the battery for 8-12 hours. Do not leave the battery on the charger for more than 20 hours.

POSSIBLE CAUSE: Thermal fuse has tripped.

The vehicle is equipped with a self-resetting fuse. When the vehicle is overloaded or operated incorrectly; the self-resetting fuse will be cut off for 5-20seconds before becoming operational again. The self-resetting fuse is under the seat (Refer to the picture.)

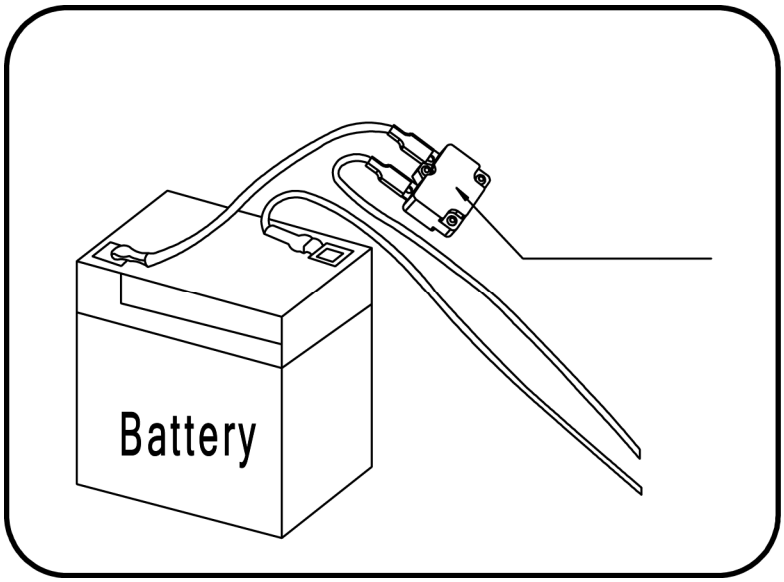

To avoid the fuse cut off the power, follow these guidelines:

DO NOT overload the vehicle, Maximum weight allowed :60kg

DO NOT tow anything behind the vehicle.

DO NOT drive up steep slopes.

DO NOT drive into fixed objects, which may cause the wheels to spin, causing the motor to overheat.

DO NOT drive in very hot weather, components may overheat.

DO NOT tamper with the electric system. Doing so may create a short circuit, causing the fuse to trip.

POSSIBLE CAUSE: Wheel nuts are loose.

If the nuts are not tight, the wheels will not engage the forward gears. Tighten the nut with the nut wrench.

POSSIBLE CAUSE: Battery connector or wires are loose.

Make Sure the battery connectors are firmly plugged into each other.

POSSIBLE CAUSE: Battery is dead.

Have you properly maintained the battery according to the directions? Is the battery old? Your battery may need to be replaced.

POSSIBLE CAUSE: Electric system is damaged.

Water may have corroded the system, or loose dirt, gravel or sand might have jammed the switch.

POSSIBLE CAUSE: Motor is damaged.

The motor needs professional repair.

■ PROBLEM: The battery will not recharge.

POSSIBLE CAUSE: Battery connector or adapter connector is loose.

Make sure the battery connector and adapter connector are firmly plugged together.

POSSIBLE CAUSE: Charger is not plugged in.

Make sure the charger is plugged into the wall outlet and the power flow to the outlet is on.

POSSIBLE CAUSE: Charger is not working.

Is the charger warm while charging? If not, the charger may be broken and may need to be replaced.

Troubleshooting Guide

■ PROBLEM: The vehicle does not run very long.

POSSIBLE CAUSE: Battery may be undercharged.
You may not be charging the battery long enough. After each use, or once a month minimum, charge the battery for 8 to 12 hours. Do not leave the battery on the charger for more than 20 hours.

POSSIBLE CAUSE: Battery is old.
The battery will eventually lose the ability to hold a charge. Depending on the amount of use, and varying conditions, the battery should operate for one to three years. Replace the battery with a new one.

■ PROBLEM: Battery buzzes or gurgles when charging.

This is normal and not a cause for concern. It may also be silent when charging, which is also normal.

■ PROBLEM: Charger feels warm when recharging battery.

This is normal and not a cause for concern.

Maintaining Your Vehicle

- It is parents' responsibility to check main parts of the toy before using, Must regularly examine for potential hazard, such as the battery, charge, cable or cord, plug, screws are fastening enclosure of other parts and that in the event of such damage, the toy must not be until that damage had been properly removed.

- Make sure the plastic parts of the vehicle are not cracked or broken.

- Occasionally use a lightweight oil to lubricate moving parts such as wheels.

- Park the vehicle indoors or cover it with a tarp to protect it from wet weather.

- Keep the vehicle away from sources of heat, such as stoves and heaters. Plastic parts may melt.

- Recharge the battery after each use. Only an adult can handle the battery. Recharge the battery at least once a month when the vehicle Raider is not being used.

- Do not wash the vehicle with a hose. Do not wash the vehicle with soap and water. Do not drive the vehicle in rainy or snowy weather. Water will damage the motor, electric system and battery.

- Clean the vehicle with a soft, dry cloth. To restore shine to plastic parts, use a non-wax furniture polish. Do not use car wax. Do not use abrasive cleaners.

- Do not drive the vehicle in loose dirt, sand or fine gravel which could damage moving parts, motors or the electric system.

- When not using, all the electrical source should be turned off. Turn off the power switch and disconnect the battery connection.

Disposal Of Battery

Disposal Of Battery

- Your sealed lead-acid battery must be recycled or disposed of in an environmentally sound manner.
- Do not dispose of your lead-acid battery in a fire. The battery may explode or leak.
- Do not dispose of a lead-acid battery in your regular, household trash. The incineration, land filling or mixing of sealed lead-acid batteries with household trash is prohibited by law.
- Return an exhausted battery to your local approved lead-acid battery recycle, such as a local seller of automotive batteries.
- Contact your local waste management officials for other information regarding the environmentally sound recycling and disposal of lead-acid batteries.
- The battery must be charged only by adult .Please charge the product before using!
- The toy should not be connected to excessive powers (more than the quantity specified herein), and it should not be operated during charging process.
- Any rechargeable battery must only be charged under adult's supervision.
- Battery & charger should be regularly checked, including wires, plugs, casing, and other parts. Stop using and restored them if finding any damage.
- Open the battery cover on the remote control, and put two pieces of batteries,paying attention to batteries polarity. Replace the battery cover and lock with screws (please replace the battery according to the above steps and should be done by adult) .
- All batteries should be inserted with the correct polarity.
- Non-rechargeable battery should not be charged, please remove any running-off battery from the toy.
- Do not use old and new batteries together, or mix different types of batteries.
- The battery charger used with the toy are to be regularly examined for damage to the cord, plug, enclosure and other parts, and in the event of such damage, they must not be used until that damage had been repaired.

UK

If you have any questions, please contact our customer care center.
Our contact details are below:

0044-800-240-4004

enquiries@mhstar.co.uk

IMPORTER ADDRESS:
MH STAR UK Ltd
1 Northampton Cross Logistics Park
Northampton Cross Road
Northampton
NN4 9FH
0800 240 4050
enquiries@mhstar.co.uk
Made in china