AIYAPLAY

IN260600200V01_UK_370-549V70

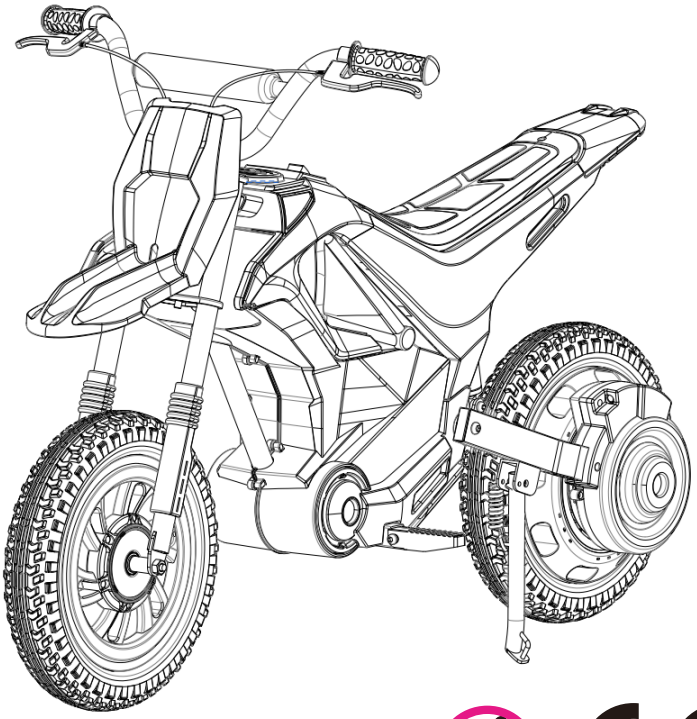

Owner's Manual

with Assembly Instructions

Styles and colo(u)rs may vary.
Made in China.

The owner's manual contains important safety information as well as assembly, use and maintenance instructions.
The Ride-on Car must be assembled by an adult who has read and understands the instructions in this manual.
Keep the package away from children and dispose of properly before use.
Keep this manual for future reference.

On the purchase of your new Ride-On.

This ride-on will provide your child with many miles of riding enjoyment. To help ensure a safe ride we ask you to please read this manual carefully, and keep it for future reference.

Please follow the recommendations in this manual, they are designed to improve the safety and operation of your ride-on car and it's rider.

HZB-9528 Children Battery Powered Ride-On manufactured by Chizhou Haizhibao Children Products Co., Ltd. (Add: Matang Industrial Zone, qingyang County,Chizhou City, Anhui Province, P.R.China).

SPECIFICATIONS:

Battery	24V9AH *1
Charger	28.8V800mA
Input	Depend on local voltage

Suitable age: Over 6 years

Load Capacity: Under 50kg

Size of ride-on car: 125*55*80CM

Power way: Charging type

Charge time: 8-12 hours

⚠ WARNING!

- **CHOKING HAZARD** - Small parts. Not suitable for children under 6 years. The product contains small parts, keep children away when assembling.
- **ADULT ASSEMBLY REQUIRED.**
- Always remove protective material and poly bags and dispose before assembly.
- Protective equipment should be worn. Always wear shoes and sit in the seat when operating the vehicle.
- Only drive on level ground. Never use on the lawn.
- Keep your hands, hair, and clothes away from moving parts.
- Never leave child unattended. Direct adult supervision is required. Always keep child in view when child is in vehicle.
- To reduce the risk of injury, adult supervision is required. Never use in roadways, near motor vehicles, on or near steep inclines or steps, swimming pools or other bodies of water, always wear shoes, and never allow more than 1 rider.
- Never use in unsafe conditions such as snow, rain, loose dirt, mud, sand, or gravel, otherwise may result in an unexpected accident such as tipping over, and could damage the electrical system or battery
- Not to be used in traffic.
- This toy should be used with caution since skill is required to avoid falls or collisions causing injury to the user or third parties.
- This toy is unsuitable for children under 6 years due to its maximum speed; Maximum user weight is 50kg.
- This toy has no brake.

⚠ BATTERY INFORMATION

- Non-rechargeable batteries are not to be recharged.
- Rechargeable batteries are to be removed from the toy before being charged.
- Rechargeable batteries are only to be charged under adult supervision.
- Different types of batteries or new and used batteries are not to be mixed.
- Batteries are to be inserted with the correct polarity.
- Exhausted batteries are to be removed from the toy.
- The supply terminals are not to be short-circuited.

⚠ WARNING!

The remote control is not a toy. It is for the adult use only, and should not be used by a child. A close adult supervision is always required. Reception range may change significantly with weather, battery, and other environmental conditions.

Parts Diagram | 3

HINT: Some parts shown are assembled on both sides of vehicle

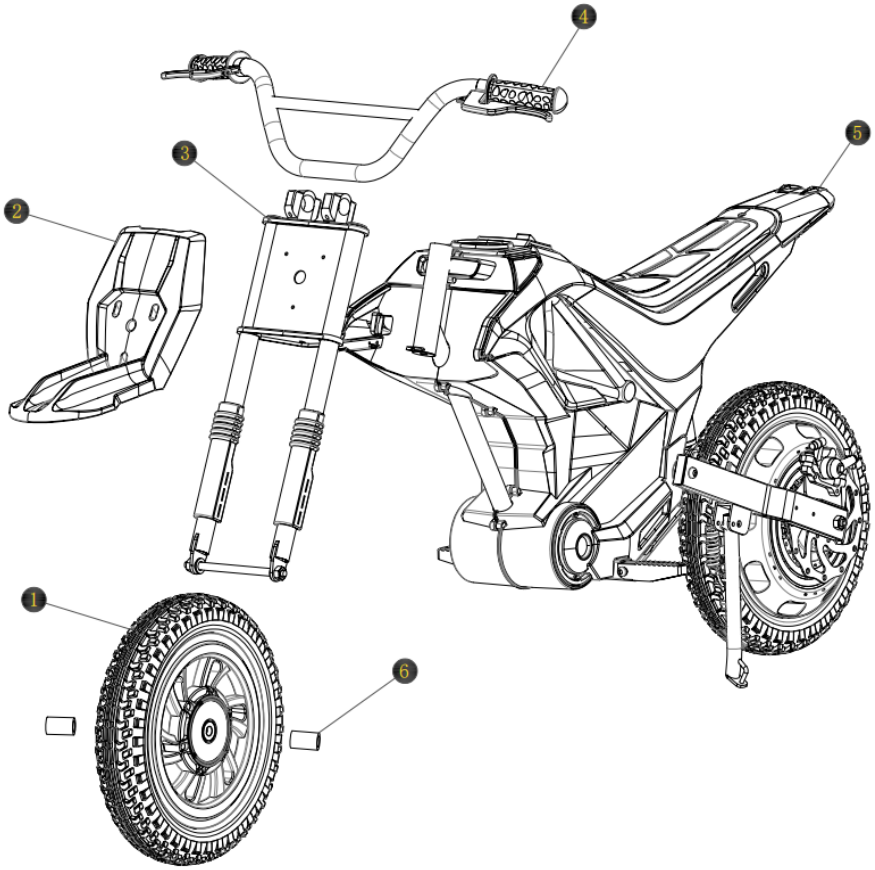



x2





x1

Assembly tools required (not included):



Screwdriver

Parts List | 4

1 Front wheel x1 	2 Windshield x1 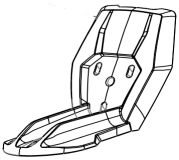	3 Front fork x1 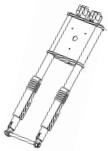
4 Handlebars x1 	5 Body x1 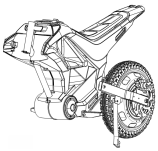	6 Axle sleeve x2 
7 4*14 screw x1 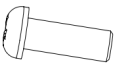	8 Gasketx2 	

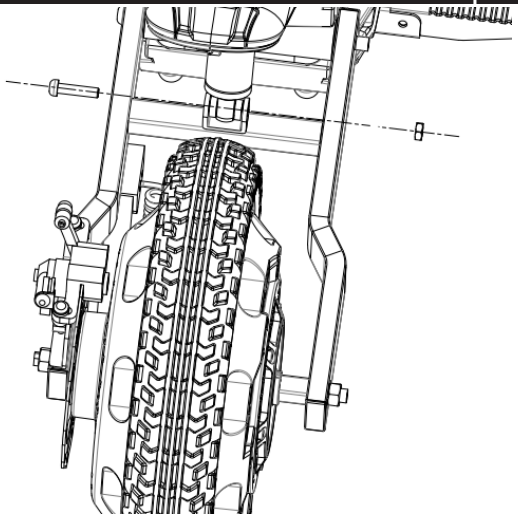

1.First, remove the lower screw of the shock absorber.
2.Align the mounting hole of the shock absorber with the corresponding hole on the vehicle's metal frame.
3.Insert a M6 bolt through the shock absorber and the frame hole.
4.Finally secure it by tightening an M6 hex nut.

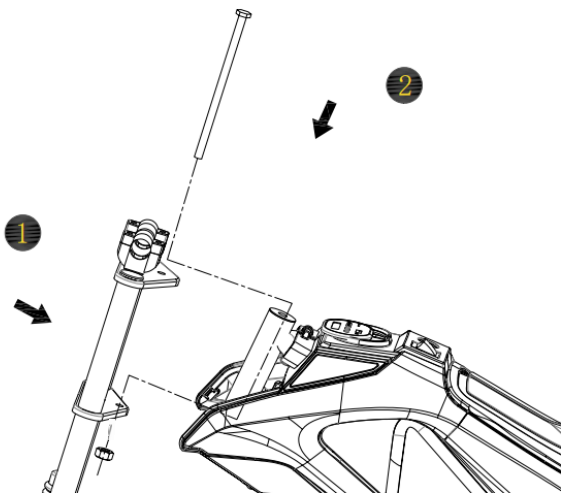

1.First, remove the M10 bolt from the front fork.
2.Position the front fork onto the axle of the vehicle's metal frame, aligning the mounting holes.
3.Insert the M10 bolt through the frame and the front fork holes.
4.Place a gasket onto the bolt, then secure it by tightening a M10 hex nut.

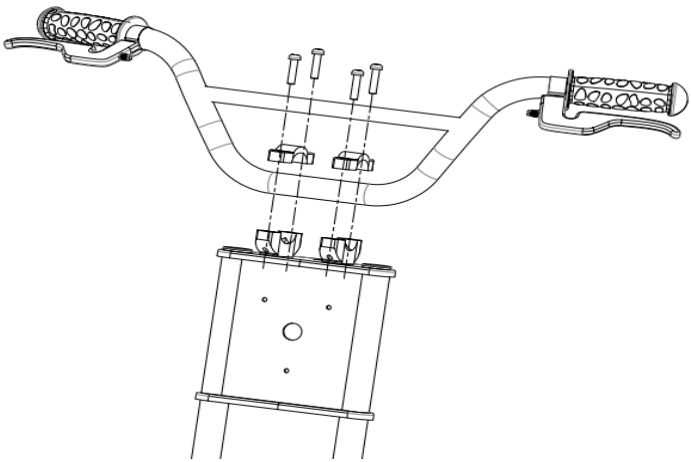

1.First, remove the screws from the handlebar clamp on the front fork.
2.Position the handlebar into the upper and lower halves of the clamp.
3.Finally, tighten the screws to secure the handlebar in place.

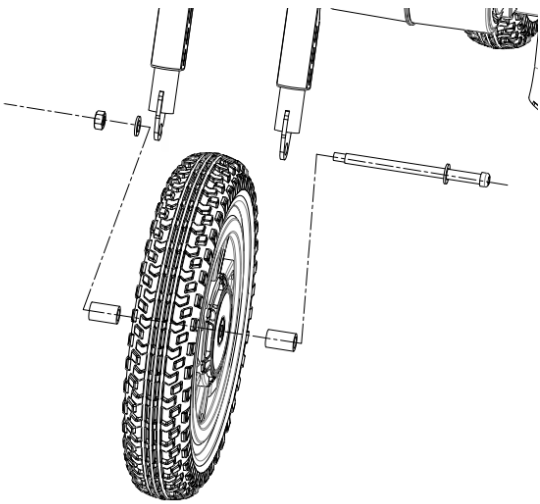

1.First, remove the front wheel axle and its nut.
2.Install the front wheel, axle sleeve, and gaskets in the sequence shown in the diagram.
3.Finally, secure the assembly by tightening the nut.

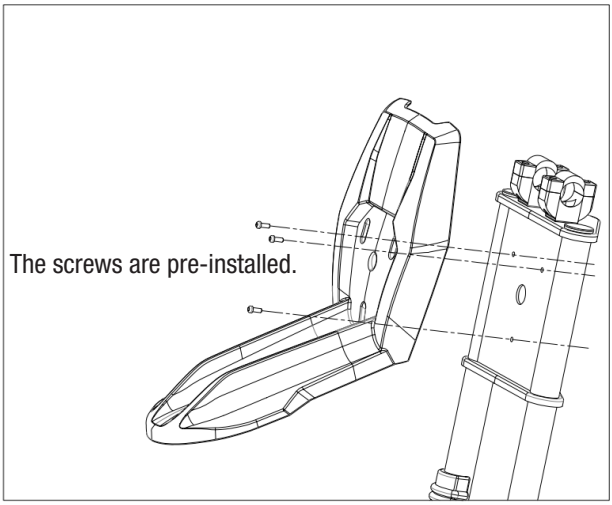

1.Align the windshield with the front fork.
2.Secure it in place by tightening the M4 screws.

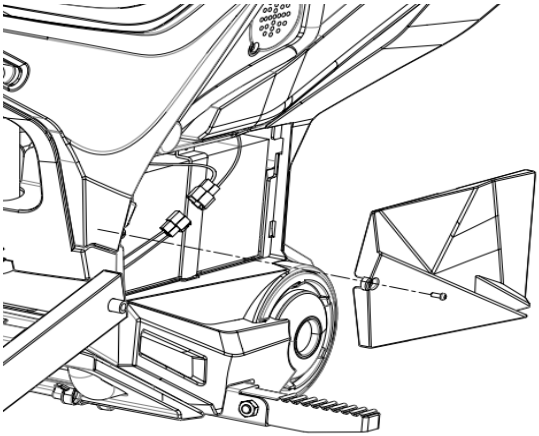

1.First, remove the side cover.
2.Connect the plug to the battery.
3.Reinstall the side cover and tighten the 4*14 screw to secure it.

⚠ WARNING!

- **ONLY an adult is allowed charge and recharge the battery!**
- **This product with Charging Protection: when charging, all functions will be cut off.**

- The POWER SWITCH must be turned in OFF position when charging.
- Before the first use, you should charge the battery for 4-6 hours. Do not recharge the battery for more than 10 hours to avoid overheating the charger.
- When the vehicle begins to run slowly, recharge the battery.
- After each use or once a month minimum recharge time as 8 to 12 hours, less than 20 hours at most.
- Use only battery(ies) and charger specified by the manufacturer. Using another battery or charger may cause a fire or explosion. Do not use the battery or charger for any other product.
- If your ride-on with a Digital voltmeter(IF EQUIPPED), the magnitude of voltage will tell you how much power is remaining in the battery when you must recharge the battery. Make sure the vehicle is stop!

12V product	**less than 12.5V**	**The battery needs to be charge.**
24V product	**less than 24.1V**	

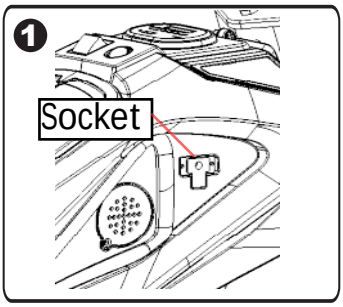

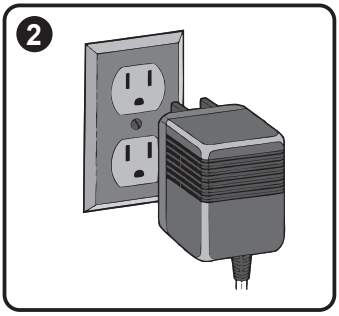

1. Plug the charger port into the input socket. (the socket is on the right side of the vehicle body)
2. Plug the charger plug into a wall outlet. The battery will begin charging.

Battery Disposal

The battery will eventually lose the ability to hold a charge. Depending on the amount of use, and varying conditions, the battery should operate for one to three years.
Important! Recycle the dead battery responsibly. The battery contains lead acid (electrolyte) and must be disposed of properly and legally. It is illegal in most areas to incinerate lead acid batteries or dispose of them in landfills. Take it to a federal or state-approved lead acid battery recycler, such as local automotive battery retailer.
Do not throw the battery away with your regular household waste!

BATTERY CHARGING WARNINGS

General Safety Warnings

- ⚠ "Read all instructions before using this appliance”
- ⚠ "This appliance can be used by children aged from 8 years and above and persons with reduced physical, sensory or mental capabilities or lack of experience and knowledge if they have been given supervision or instruction concerning use of the appliance in a safe way and understand the hazards involved”
- ⚠ "Children shall not play with the appliance”
- ⚠ "Cleaning and user maintenance shall not be made by children without supervision”

Electrical Safety Warnings

- ⚠ "If the supply cord is damaged, it must be replaced by the manufacturer, its service agent or similarly qualified persons in order to avoid a hazard”
- ⚠ "Do not use outdoors"
- ⚠ "Do not immerse in water or other liquids”
- ⚠ "Disconnect from supply when not in use”

Charger-Specific Warnings

- ⚠ "Use only with batteries specified by the manufacturer”
- ⚠ "Ensure correct polarity when connecting batteries”
- ⚠ "Do not charge damaged or leaking batteries”
- ⚠ "Remove batteries if appliance is not to be used for extended periods”
- ⚠ "Do not short-circuit the output terminals”

Troubleshooting Guide | 10

Problem	Possible Cause	Solution
Vehicle does not run	Battery low on power	Recharge battery.
	Thermal fuse has tripped	Reset fuse, see <Fuse>
	Battery connector or wires are loose	Check that the battery connectors are firmly plugged into each other. If wires are loose around the motor ***contact your distributor please.***
	Battery is dead	Replace battery, ***contact your distributor please.***
	Electrical system is damaged	***Contact your distributor please.***
	Motor is damaged	***Contact your distributor please.***
Vehicle does not run very long	Battery is under charged	Check that the battery connectors are firmly plugged into each other when recharging
	Battery is old	Replace battery, ***contact your distributor please.***
Vehicle runs sluggishly	Battery low on power	Recharge battery, ***contact your distributor please.***
	Battery is old	Replace battery, ***contact your distributor please.***
	Vehicle is overload	Reduce weight on vehicle.
	Vehicle is being used in harsh conditions	Avoid using vehicle in harsh conditions, see <User Notice>.
Vehicle needs a push to go forward	Poor contact of wires or connectors	Check that the battery connectors are firmly plugged into each other. If wires are loose around the motor, ***contact your distributor please.***
	“Dead Spot” on motor	A dead spot means the electric power is not being delivered to the terminal connection and the vehicle needs repair. ***Contact your distributor please.***
Difficult shifting from forward to reverse or vice-versa	Attempting to shift while the vehicle is motion	Completely stop the vehicle and shift, see <Use Your Ride-On>
Loud grinding or clicking noises coming from motor or gear box	Motor or gears are damaged	***Contact your distributor please.***
Battery will not recharge	Battery connector or adapter connector is loose	Check that the battery connectors are firmly plugged into each other.
	Charger not plugged in	Check that the battery charger is plugged into a working wall outlet.
	Charger is not working	***Contact your distributor please.***
Charger feels warm when recharging	This is normal and not a cause for concern	

Completely read through this manual and the troubleshooting guide table before calling. If you still need help resolving the problem ***Contact your distributor please.***

Maintaining | 11

- It is parents' responsibility to check main parts of the toy before using, Must regularly examine for potential hazard, such as the battery, charge, cable or cord, plug, screws are fastening enclosure of other parts and that in the event of such damage, the toy must not be used until that damage had been properly removed.
- Park the vehicle indoors or cover it with a tarp to protect it from wet weather.
- Recharge the battery after each use. Only an adult can handle the battery. Recharge the battery at least once a month when the vehicle raider is not being used.
- Do not wash the vehicle with a hose. Do not wash the vehicle with soap and water. Do not drive the vehicle in rainy or snowy weather. Water will damage the motor, electric system and battery.
- Clean the vehicle with a soft, dry cloth. To restore shine to plastic parts, use a non-wax furniture polish. Do not use car wax. Do not use abrasive cleaners.
- When not using, all the electrical source should be turn off. Turn off the power switch and disconnect the battery connection.

Fuse | 10

The battery features a thermal fuse with a rest fuse that will automatically trip and cut all power to the vehicle if the motor, electric system or battery is overloaded. The fuse will reset and power will be restored after the unit is turned OFF for 20 seconds and then turned ON again. If the thermal fuse trips repeatedly during normal use, the vehicle may need repair. **Contact your distributor please.**

To avoid losing power, follow these guidelines:

- Do not overload the vehicle.
- Do not tow anything behind the vehicle.
- Do not drive up steep slopes.
- Do not drive into fixed objects, which may cause the wheels to spin, causing the motor to overheat.
- Do not drive in very hot weather, components may overheat.
- Do not allow water or other liquids to come in contact with the battery or other electric components.
- Do not tamper with the electric system. Doing so may create a short, causing the fuse to trip.

⚠ **RISK OF FIRE. Do not bypass. Replace only with a new fuse.**

Our products are suitable for
ASTM F963; GB6675; EN71 and EN62115 standard.

UK

If you have any questions, please contact our customer care center.
Our contact details are below:



0044-800-240-4004



enquiries@mhstar.co.uk

IMPORTER ADDRESS:
MH STAR UK Ltd
1 Northampton Cross Logistics Park
Northampton Cross Road
Northampton
NN4 9FH
Made in china