IN260500400V01_UK

820-533V70

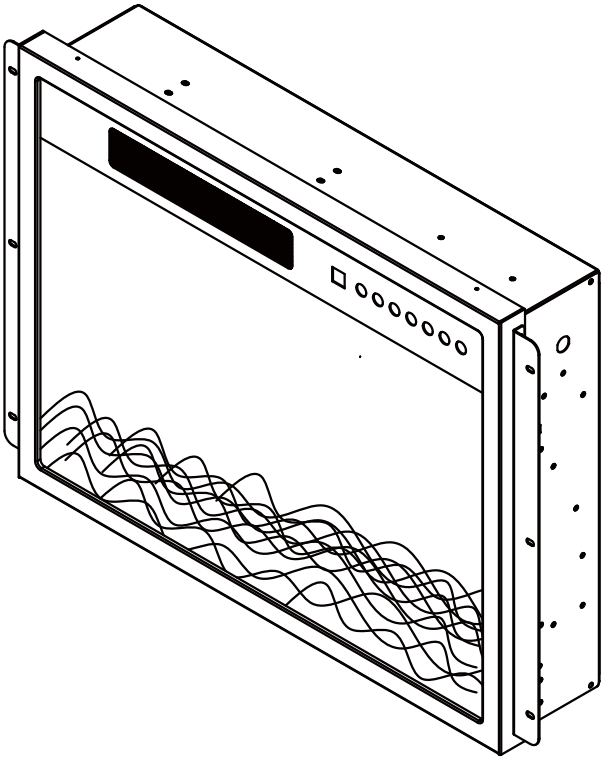

EN_This product is only suitable for well insulated spaces or occasional use.

***EN*_IMPORTANT, RETAIN FOR FUTURE REFERENCE: READ CAREFULLY.**

EN

WELCOME TO THE FUTURE OF HOME ENTERTALNMENT!

Thank you for choosing our new electric fireplace and TV stands! Our products are designed to be both stylish and functional, with a focus on energy efficiency and sustainability.
We use high-quality materials to ensure that our pieces are built last, so you can enjoy them for years. Whether you're looking for a cozy electric fireplace or a stylish TV stand, we have something for everyone.

Our products are perfect for any home or office, and we're confident that you'll love them as much as we do!

IMPORTANTREADSAFETY INSTRUCTIONS

READ ENTIRE MANUAL PRIOR TO USE.

- Please read all of the information in this operating manual, including all safety operating, and maintenance information. To avoid the potential risk of fire, electric shock, or injury to persons, users should follow the directions and warnings in this manual.
- Read all instructions before using this heater.
- Do not use this heater outdoors.
- This heater is not intended for use in bathrooms, laundry areas and similar indoor locations. Never locate the heater where it may fall into a bathtub or other water container.
- Do not run the power cord under carpeting. Do not cover the power cord with throw rugs, runners, or the like. Arrange the power cord away from traffic areas and where it will not bet ripped over.
- To disconnect the heater, turn controls to off, then remove the plug from the outlet
- Connect to properly grounded outlets only. Always plug heaters directly into a wall outlet/receptacle. Never use with an extension cord or relocatable power tap (outlet/power strip).
- To prevent a possible fire, do not block fire box air intakes or the exhaust in any manner. Do not operate the fire box on soft surfaces, like a bed, where openings may become blocked.
- There is a thermostat limiter inside the heater. When the inner temperature over heats or abnormal heating occurs, the thermostat protective device cuts off the power supply to avoid fireplace damaged or risk of fire.
- Use this heater only as described in this manual. Any other use not recommended by the manufacturer may cause fire. electrical shock, or injury to persons.
- **WARNING**: There are no user serviceable parts inside the fireplace/heater, If the unit appears to malfunction, turn the unit off and unplug the unit from the wall immediately, and contact Customer.

EN

- **WARNING**: This heater is hot when in use. To avoid burns, do not let bare skin touch hot surfaces. if provided, use handles when moving this heater, keep combustible material, such as furniture pillows, bedding, papers, clothes and curtains at least 3 f.t(0.9 meters) from the front of the heater and keep them away from the sides and rear.
- **WARNING**: Extreme caution is necessary when any heater is used by or near children or invalids and whenever the heater is left operating and unattended.
- **WARNING**: Always unplug the heater when not in use.
- **WARNING**: Do not operate any heater with a damaged cord or plug or after the heater malfunctions, has been dropped or damaged in any manner. Return the heater to an authorized service facility for examination, electrical or mechanical adjustment, or repair.
- **WARNING**: Do not insert or allow foreign objects to enter any ventilation or exhaust openings as this may cause an electric shock or fire, or damage the heater.
- **WARNING**: A heater has hot and arching or sparking parts inside. Do not use in areas where gasoline, paint, or flammable liquids are used or stored.
- **CAUTION**: While the heater is in use the top center of the fireplace can get hot to the touch, and may cause serious injury or burns. Always supervise small children around the fireplace/heater. Do not place any cloth or decorations over the heater outlet of the fireplace or otherwise obstruct the heater outlet of the fi replace.as this may cause a fire and serious injury may result.
- This appliance can be used by children aged from 8 years and above and persons with reduced physical, sensory or mental capabilities or lack of experience and knowledge if they have been given supervision or instruction concerning use of the appliance in a safe way and understand the hazards involved. Children shall not play with the appliance. Cleaning and user maintenance shall not be made by children without supervision.
- Children of less than 3 years should be kept away unless continuously supervised.
- Children aged from 3 years and less than 8 years shall only switch on/off the appliance provided that it has been placed or installed in its intended normal operating position and they have been given supervision or instruction concerning use of the appliance in a safe way and understand the hazards involved. Children aged from 3 years and less than 8 years shall not plug in, regulate and clean the appliance or perform user maintenance.
- **CAUTION** - Some parts of this product can become very hot and cause burns. Particular attention has to be given where children and vulnerable people are present.
- If the supply cord is damaged, it must be replaced by the manufacturer, its service agent or similarly qualified persons in order to avoid a hazard.

- **CAUTION**: In order to avoid a hazard due to inadvertent resetting of the thermal cutout, this appliance must not be supplied through an external switching device, such as a timer, or connected to a circuit that is regularly switched on and off by the utility.
- **WARNING**: In order to avoid overheating, do not cover the heater.
- The heater must not be located immediately below a socket-outlet.
- Do not use this heater in the immediate surroundings of a bath, a shower or a swimming pool.
- Do not use this heater if it has been dropped;
- Do not use if there are visible signs of damage to the heater;
- Use this heater on a horizontal and stable surface, or fix it to the wall, as applicable.
- **WARNING**: Do not use this heater in small rooms when they are occupied by persons not capable of leaving the room on their own, unless constant supervision is provided.
- **WARNING**: To reduce the risk of fire, keep textiles, curtains, or any other flammable material a minimum distance of 1 m from the air outlet.

GROUNDING INSTRUCTIONS

DANGER:

Improper connection of the equipment-grounding conductor can result in a risk of electric shock. Check with a qualified electrician or serviceman if you are in doubt as to whether the product is properly grounded. Do not modify the plug provided with the product if it will not fit the outlet, have a proper outlet installed by a qualified electrician.

This product must be grounded. If it should malfunction or breakdown, grounding provides a path of least resistance for electric current to reduce the risk of electric shock. This product is equipped with a cord having an equipment grounding conductor and a grounding plug. The plug must be plugged into an appropriate outlet that is properly installed and grounded in accordance with all local codes and ordinances.

This heater is for use on 230-volt circuits and has a grounded plug. An adapter is available from your local ecteronic store or online supplier for connecting three-blade grounding-type plugs to two-slot receptacles. The green grounding lug extending from the adapter must be connected to a permanent ground such as a properly grounded outlet box. The adapter should not be used if a three-slot grounded receptacle is available.

EN

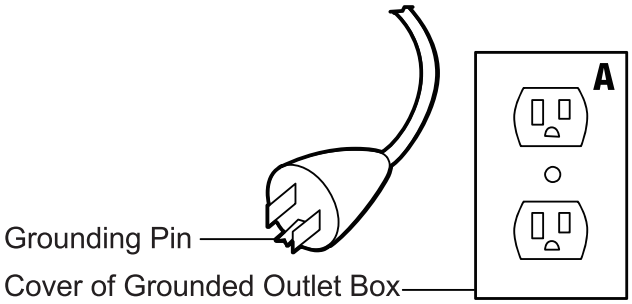

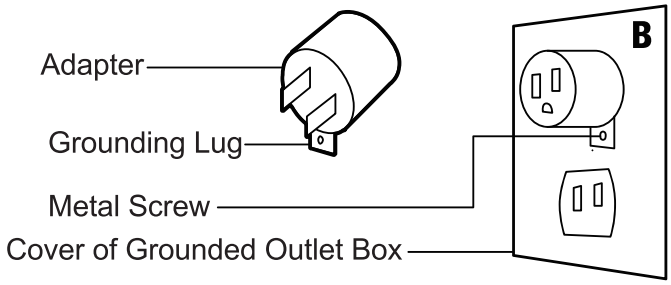

SAVE THESE INSTRUCTIONS

PRE-INSTALLATLON

ELECTRICAL SPECIFICATIONS

Voltage: 230VAC50HZ

Watts: 750W.1500W

Grab Your Tools

Phillips Screwdriver

2 Persons Assembly

Up to 30 Minutes For Assembly

WHATS IN THE BOXE

12 Screw

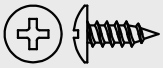

18+2 PCS

NOTE:

Hardware not shown to actual size

EN

PARTS

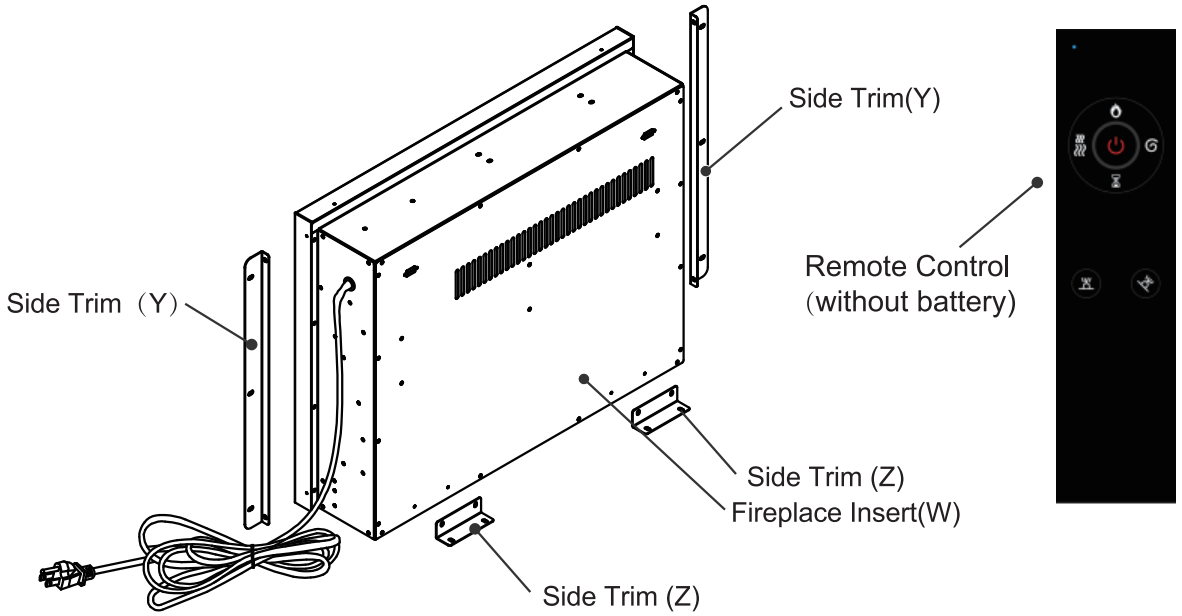

CAUTION:

This insert has front panel made of GLASS! ALWAYS use extreme caution when handling glass. Failure to do so could result in personal injury or property damage.

DIMENSION

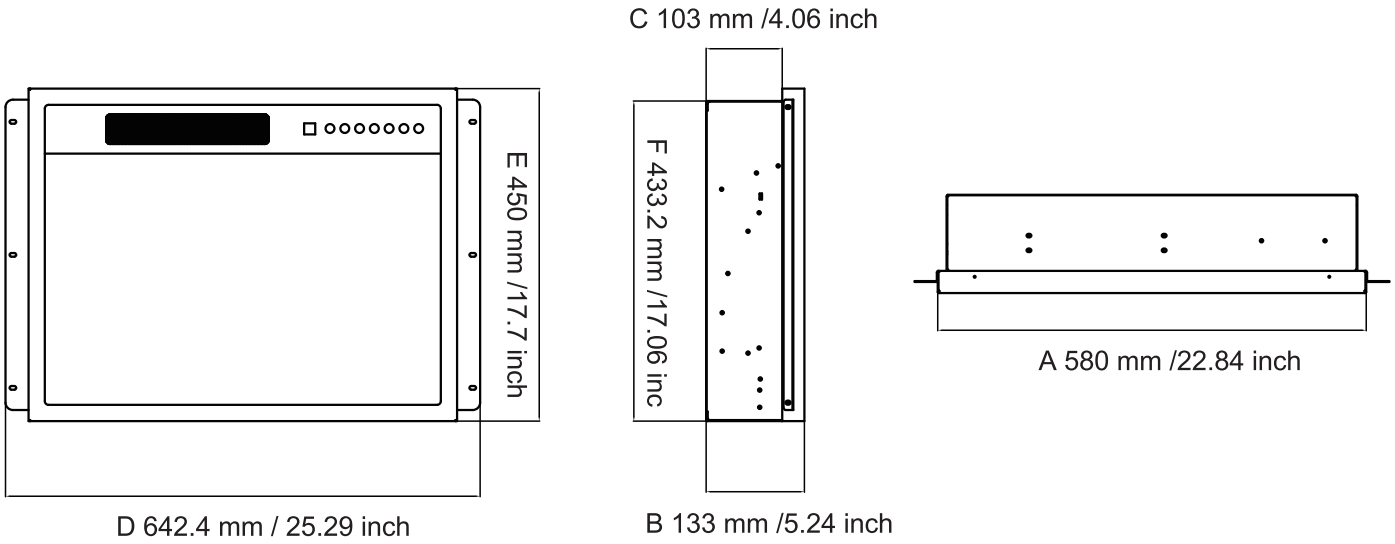

EN

PRODUCT ASSEMBLY

STEP1

Attaching the metal trims

Align and attach two side trims (Y) to both sides of the fireplace insert (w) respectively with the right-angle side facing the front of the unit, using two screws (12) per trim.

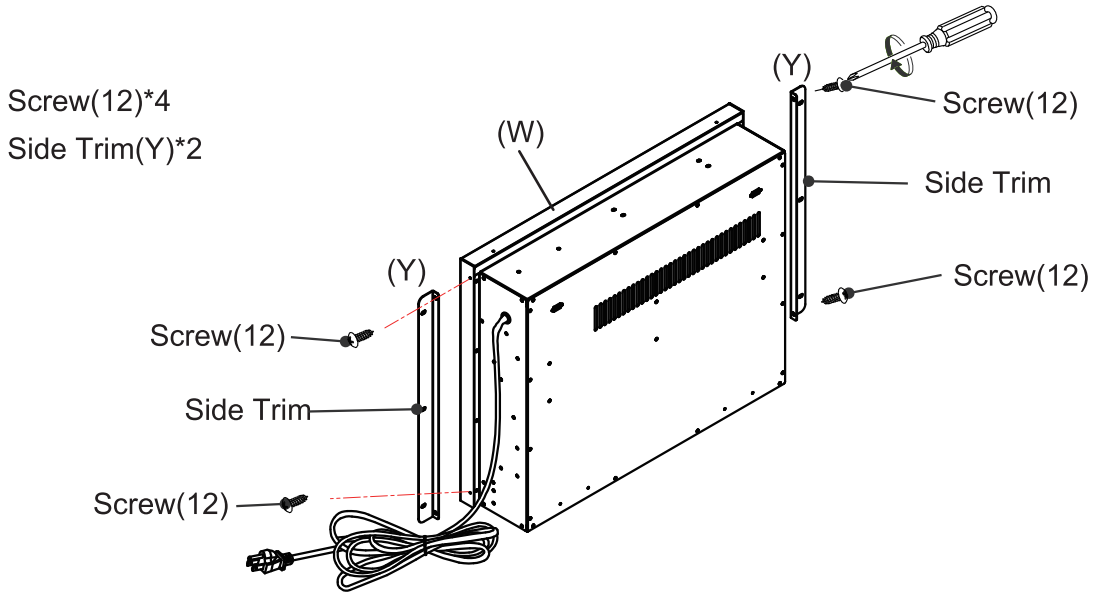

STEP2

Installing the fireplace insert

Carefully set the fireplace insert (W) into the back of the mantel and center it in the opening Use care not to scratch the wood. Check the alignment, and then attach the fireplace insert (w) to the mantel by inserting the screws (12) through the drilled holes on the side trims (Y, z) and securely screw into place using a Phillips screwdriver.

NOTE:

DO NOT attempt to install the insert from the front of the mantel - it will not fit.

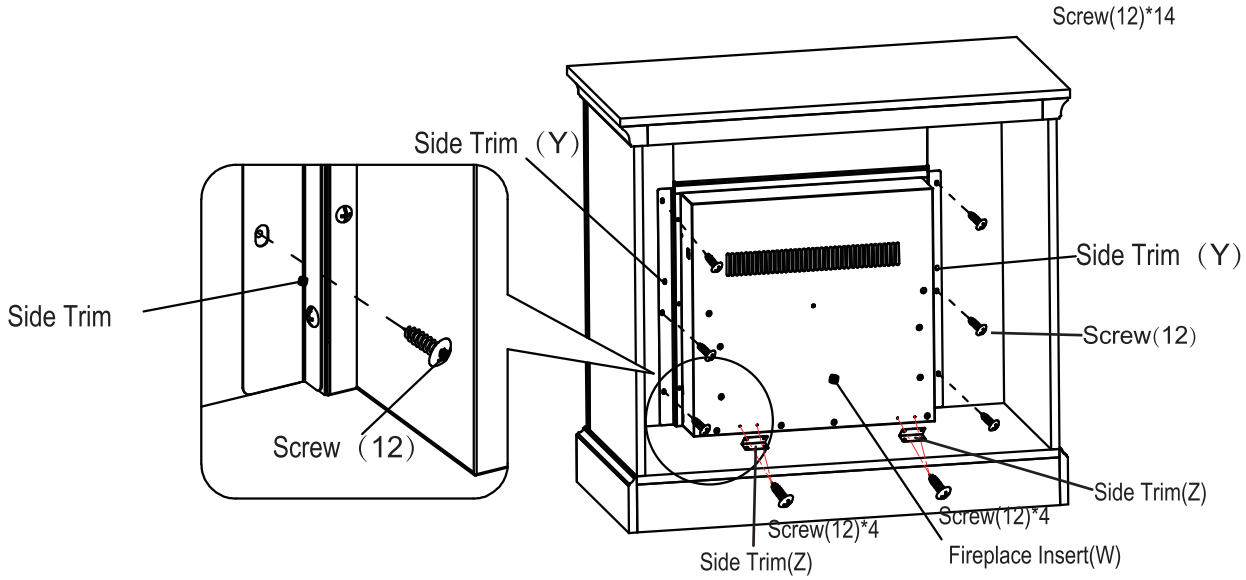

EN

PRODUCT ASSEMBLY

Operation

Identifying the control panel

The control panel is located on the top right corner of the fireplace/heater unit.

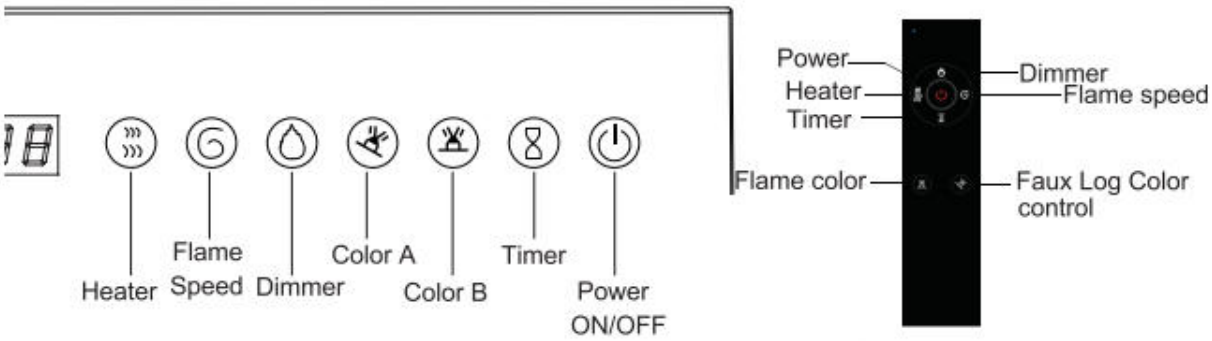

Two AAA batteries are required.

Note: Need to bring AAA batteries, open the remote control back, put the battery, cover the back.

Using the remote control

The operation of the remote control buttons work the same as the buttons on the front panel of the fireplace/heater.

Review the Operation section for more information on the functionality of these buttons.

POWER	Turn the appliance ON/OFF
FLAME SPEED	Control Flame speed. 5 Settings: (U1-U2-U3-U4-U5) Flame speed from U1 to U5. U5 is the fastest setting.
DIMMER	Control Flame brightness. 5 Settings: (F1-F2-F3-F4-F5) Flame dims from F1 to F5. F5 is the brightest setting.
TIMER	Control the Timer. 8 Settings: (1h, 2h, 3h, 4h, 5h, 6h, 7h, 8h) Press button until reach desired setting.

HEATER	Control the Heater. Press button to initiate the heater. (OF) no heater or blower. (LL)heater blows warm air(750W) (HH)heater blows hot air(1500W) NOTE: When the digital tube shows OF, the heating of the electric fireplace will turn off. The fan in the electric fireplace will delay work for 15 seconds and then stop.
COLOR B	Flame color change function: The electric fireplace has a flame color change function. Every time press the flame color change key on keypad or the remote controller, the buzzer will give a short sound, the flame color changes in the order (1-2-3-4-5-6-7-8-9-A-b-C) once, and the digital tube corresponds to the flame color code, (1=0range-red, 2=Lemon-yellow,3=Blue,4=0range-yellow, 5=0range-red+Lemon-yellow, 6=0range-red+Blue, 7=Blue+Orange-yellow,8=Lemon-yellow+Blue, 9=Lemon-yellow+0range-yellow+Blue,A=Orange-red+Blue+Orange-yellow,b=0range-red+Lemon-yellow+Blue, C=0range-red+Lemon-yellow+Blue+0range-yellow).
COLOR A	The carbon fire color change function: The electric fireplace has a carbon fire color change function. Every time press the flame color change key on the keypad or remote controller, the flame color changes in the order (1-2-3-4) once, and the digital tube corresponds to the flame color, (1=Orange-red, 2=Grange-red+Lemon-yellow, 3=Orange-red+Orange-yellow, 4=Orange-red+Lemon-yellow+Orange-yellow). NOTE: The mode of flame and log color has the power off or shutdown memory function, and the flame color is kept in the mode before power off or shutdown when the power is turned on after re-powering and shutdown

When pressing the current key for the first time during intermittent operation, the current mode of the key function is confirmed without enabling the current key function, and the current key function is enabled only when the key is pressed a second time.

EN

PRODUCT ASSEMBLYH

WARNING:

Do not move or remove the mesh trim panel, when the appliance is plugged in and operating. This will cause the remote control and touch panel to no longer function.

NOTICE:

When the heater is first turned on, a slight odor may be present. This is normal and should not occur again unless the heater is not used for a long period of time.

NOTICE:

To improve operation, aim the remote control at the front of the fireplace. DO NOT press the buttons too quickly. Give the unit time to respond to each command.

USING THE REMOTE CONTROLE

Installing Remote Control Batteries:
The first thing to do with the remote is to remove the battery bracket. when replacing batteries, use AAA batteries Please replace the batteries in the following order.

1. Take out the battery bracket.

2.Insert the AAA battery into the battery holder to ensure that the battery is secured.

3. Press the battery bracket into the remote control, making sure it snaps into position.

4. Turn the remote over and aim it towards the fireplace/heater unit. Press the power button on the upper portion, and see if the flames on the fireplace/heater turn on or off. if nothing appears to happen, check to make sure the battery is installed correctly, and try again.

WARNING: Do not ingest batteries.

1. Non-rechargeable batteries are not to be recharged.
2. Batteries are to be inserted with the correct polarity.
3. Exhausted batteries are to be removed from the product.
4. Always purchase the correct size and grade of battery most suitable for the intended use.
5. Replace all batteries of a set at the same time.
6. Clean the battery contacts and also those of the device prior to battery installation.
7. Remove batteries from equipment when not used for an extended period of time.

NOTE:
Battery disposal
Please always dispose of batteries at a suitable recycling point.

NOTE:
Battery disposal Please always dispose of batteries at a suitable recycling point.

USING THE REMOTE CONTROLE

WARNING:

Always disconnect from the power supply before cleaning the heater. First turn off the main power. Then remove the electrical plug from the wall outlet.

WARNING:

Do not use this fireplace insert if any part of it has been under water immediately call a qualified service technician to inspect the firebox and replace any part of the electrical system which has been underwater.

The blower motor and flame motor are pre-lubricated for a durable using time and need no further lubrication or maintenance. To remove any accumulation of dust or debris, the soft brush attachment of a vacuum cleaner should occasionally be used to clean the outlet grille of the fan heater.

1. Use a soft, clean cloth that will not scratch the surface when dusting.
2. Use a clean soft cloth dampened with warm water to clean the fireplace surface. Do not use household or abrasive cleaners, as these products may damage the surface.
3. When cleaning the glass viewing screen use a non-abrasive damp cloth with liquid cleaner or soft soap if necessary; Do not use cleaning powders or any other substance with abrasives since these substances will scratch glass.
4. Under no circumstances should this product be operated with a broken or chipped glass panel.
5. Do not strike or slam the glass.
6. In the event that your appliance is stained or otherwise damaged during use, we recommend that you call a professional to it.
7. When not in use please unplug the cord from the outlet to prevent any damage or accidents.

TROUBLESHOOTING

Problem	Solution
The unit does not turn on.	Check that the unit is fully plugged into a standard 230V outlet. Press the power button on the control panel.
The unit is on, but there is no flame effect.	Open the back panels to check if the flame spindle has fallen off from the spindle motor.
There is a visible flame effect, but the heater does not continue to blow warm air after repeatedly turning on the heater.	Turn on/off the heater button several times to make sure it is in the “ON” position.
The heater does not work, but the power and heater switches are in the "ON” position.	Turn all switches to the “OFF” position and unplug the unit from the wall outlet for 5 minutes. After 5 minutes plug the unit back into the wall outlet. and operate as normal. Make sure that no objects are blocking the air vents on the top and on the front of your fireplace.
Remote control is not working.	Change the remote battery. Operate remote transmitter at a slow measured pace. Press the remote control buttons with an even motion and gentle pressure. Repeatedly pressing buttons in rapid succession may cause the transmitter to malfunction. Stand closer to your fireplace. Remove objects that may block your remote control's ability to communicate with your fireplace.

EN

Information requirements for electric local space heaters

Model identifier(s):					
Item	**Symbol**	**Value**	**Unit**	**Item**	**Unit**
Heat output				**Type of heat output/room temperature control (select one)**	
Nominal heat output	P_{nom}	1.8 – 2.0	kW	Single stage heat output and no room temperature control	[no]
Minimum heat output (indicative)	P_{min}	1.0	kW	Two or more manual stages, no room temperature control	[yes]
Maximum continuous heat output	$P_{max.c}$	2.0	kW	With mechanic thermostat room temperature control	[no]
Power consumption				With electronic room temperature control	[no]
In off mode	P_0	0.0	W	Electronic room temperature control plus day timer	[no]
In standby mode	P_{sm}	N/A	W	Electronic room temperature control plus week timer	[no]
In idle mode	P_{idle}	N/A	W	**Other control options (multiple selections possible)**	
In network standby	P_{nsm}	N/A	W	Room temperature control, with presence detection	[no]
				Room temperature control, with open window detection	[no]
Standby mode with display of information or status			[no]	Distance control option	[no]
Seasonal space heating energy efficiency in active mode	$\eta_{s,on}$	85.0	%	Adaptive start control	[no]
				Working time limitation	[no]
				Black bulb sensor	[no]
				Self-learning functionality	[no]
				Control accuracy	[no]
Contact details:	IMPORTER ADDRESS: MH STAR UK Ltd 1 Northampton Cross Logistics Park Northampton Cross Road Northampton NN4 9FH MADE IN CHINA				

UK

If you have any questions, please contact our customer care center.
Our contact details are below:

0044-800-240-4004

enquiries@mhstar.co.uk

IMPORTER ADDRESS:
MH STAR UK Ltd
1 Northampton Cross Logistics Park
Northampton Cross Road
Northampton
NN4 9FH
MADE IN CHINA

Aosom