US/CA/UK/FR/ES/PT/DE/IT/RO

Outsunny

IN221100342V02

845-126

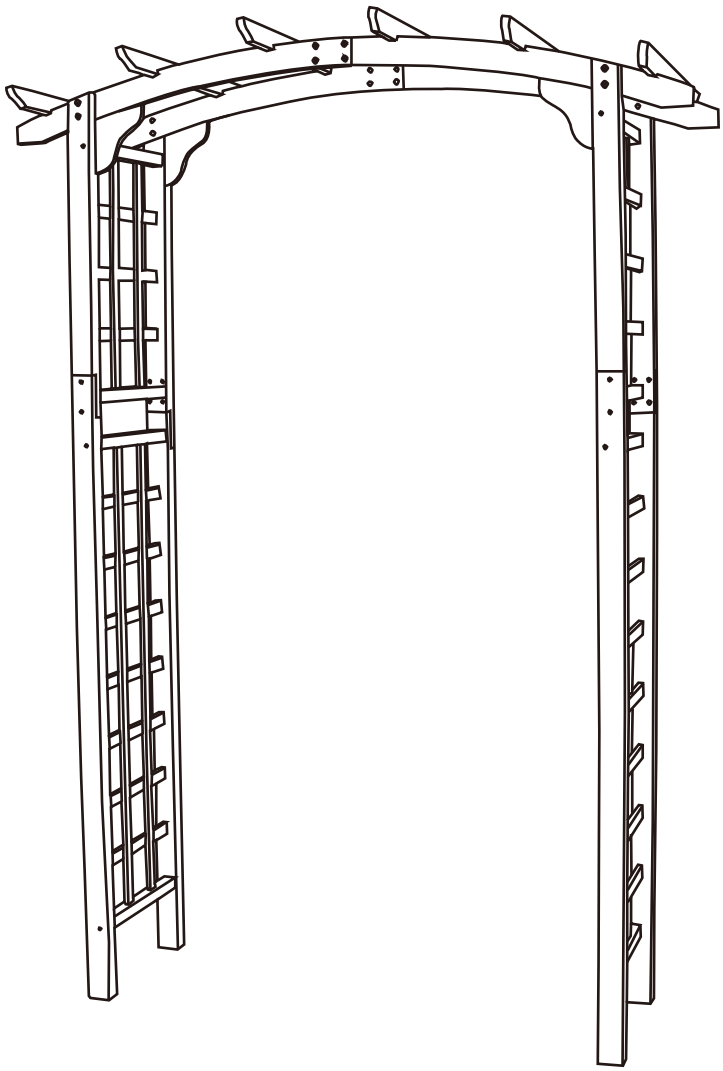

EN_ **IMPORTANT, RETAIN FOR FUTURE REFERENCE: READ CAREFULLY.**

FR_ **IMPORTANT:A LIRE ATTENTIVEMENT ET À CONSERVER POUR CONSULTATION ULTÉRIEURE.**

ES_ **IMPORTANTE, LEA Y GUARDE PARA FUTURAS REFERENCIAS.**

PT_ **IMPORTANTE: LEIA ATENTAMENTE E GUARDE PARA CONSULTA FUTURA.**

DE_ **WICHTIG! SORGFÄLTIG LESEN UND FÜR SPÄTER NACHSCHLAGEN AUFBEWAHREN.**

IT _ **IMPORTANTE! CONSERVARE IL PRESENTE MANUALE PER FUTURO RIFERIMENTO E LEGGERLO ATTENTAMENTE.**

RO_ **IMPORTANT: CITIȚI CU ATENȚIE ȘI PĂSTRAȚI PENTRU CONSULTARE VIITOARE.**

PARTS

A x02

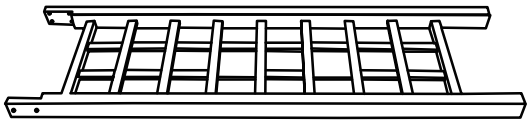

B x02

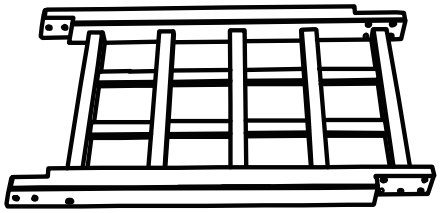

C x04



D x04



E x06

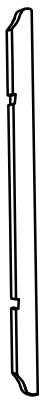

HARDWARE

F x08
M6*50
+1(spare)

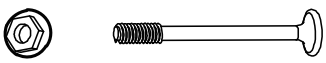

G x08
M6*30
+1(spare)



H x20
M3.5*50
+1(spare)



I x24
M3.5*40
+1(spare)



01

I x12
M3.5*40

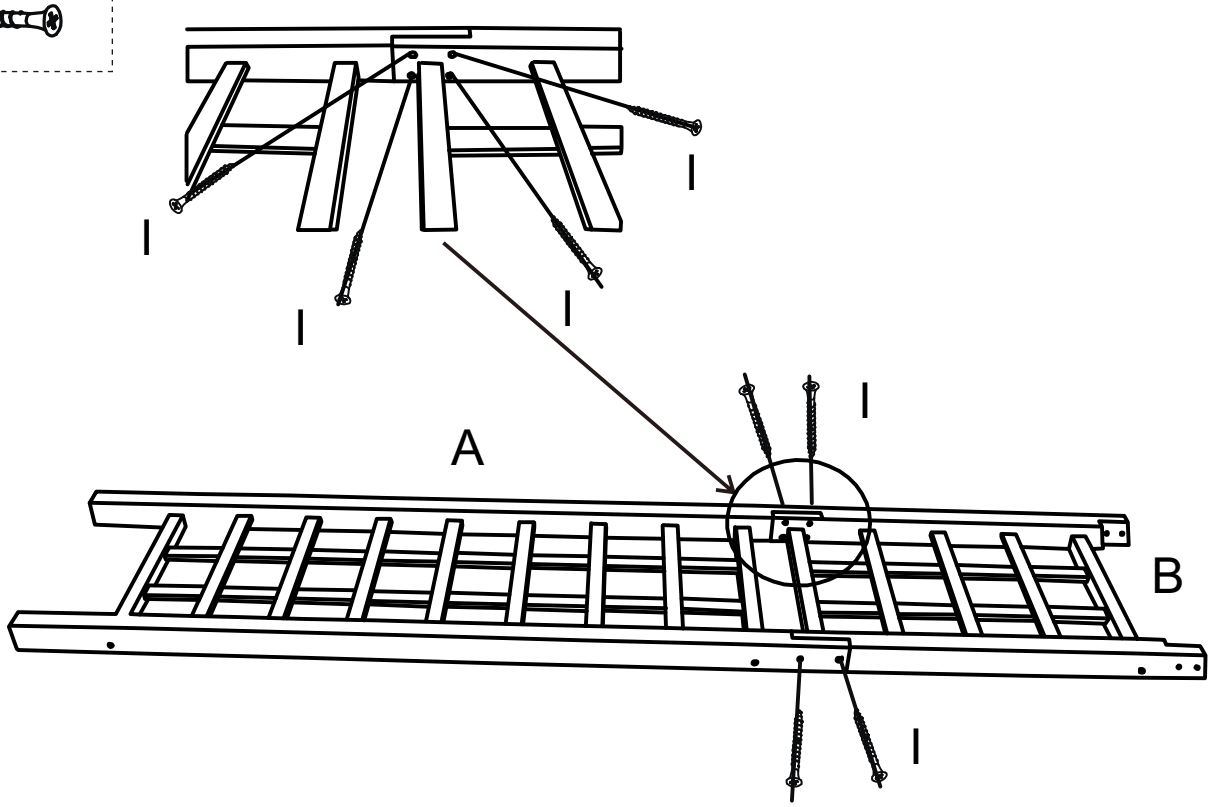

x2

02

G x04
M6*30

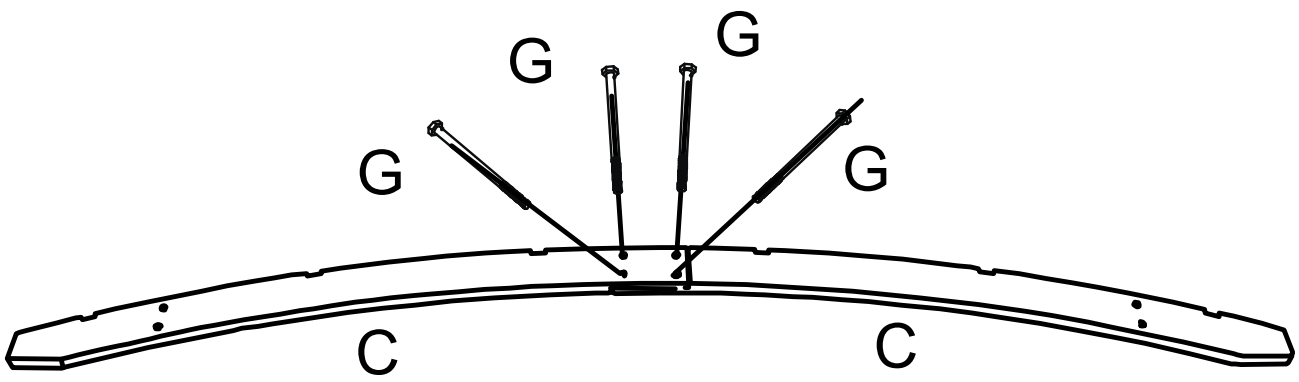

x2

03

H x08
M3.5*50

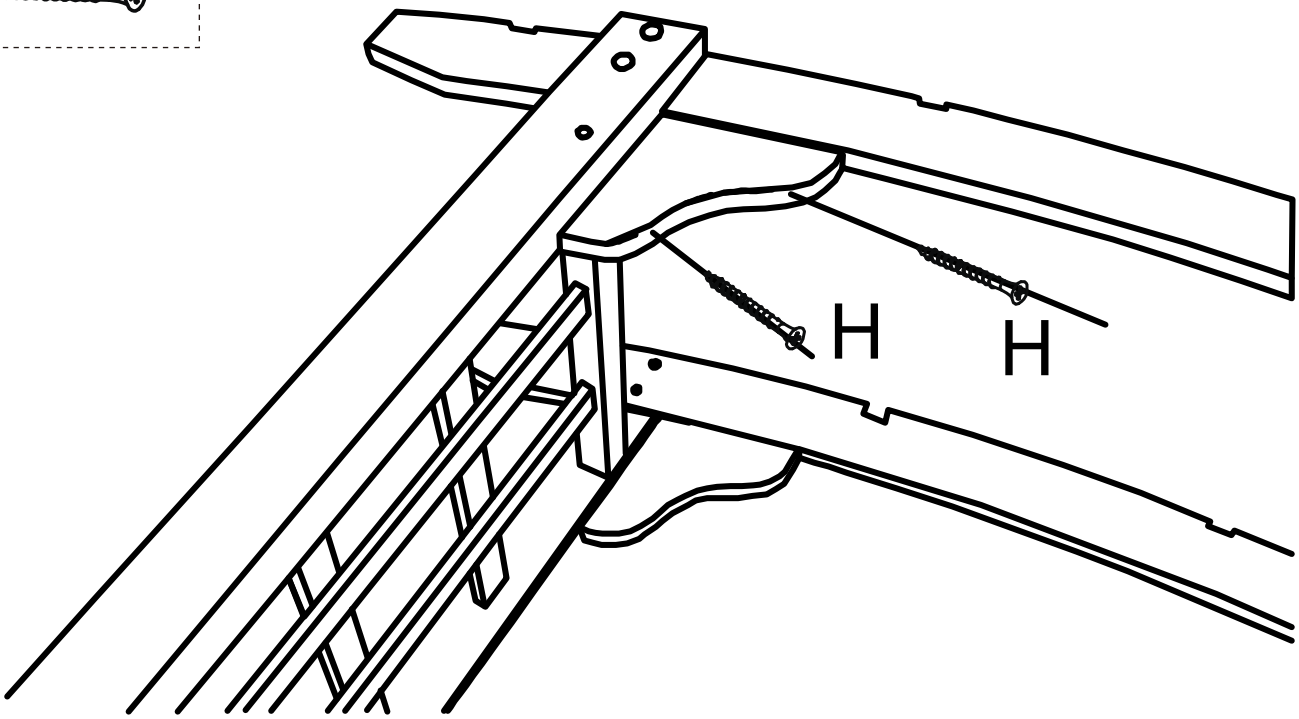

04

F x08
M6*50

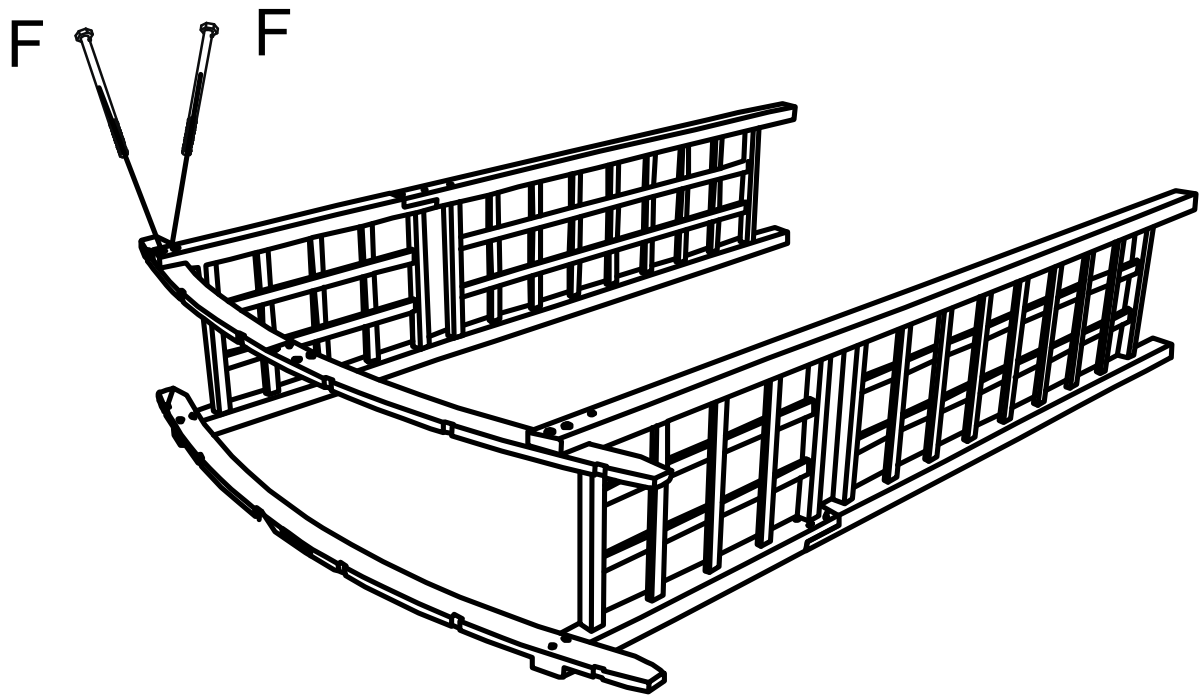

05

H x12
M3.5*50

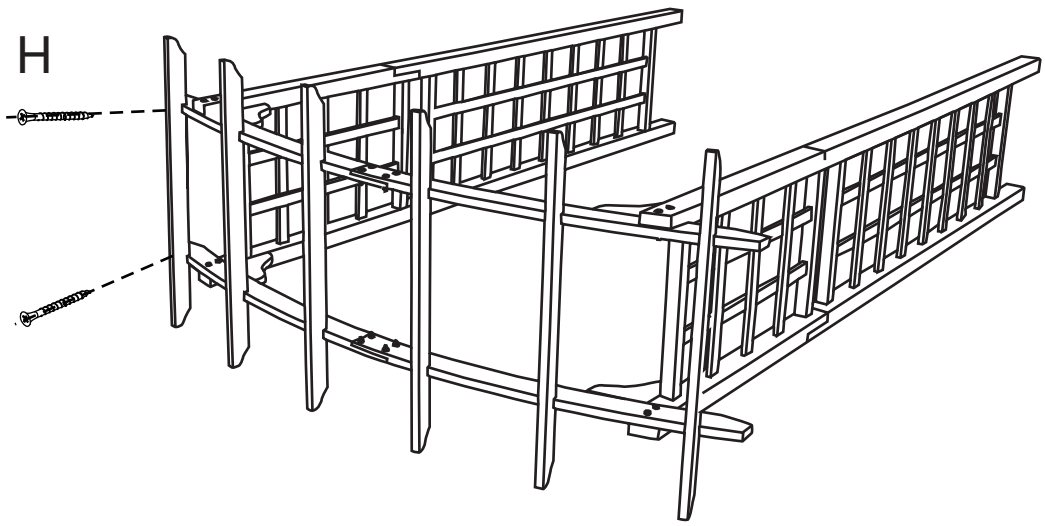

Done

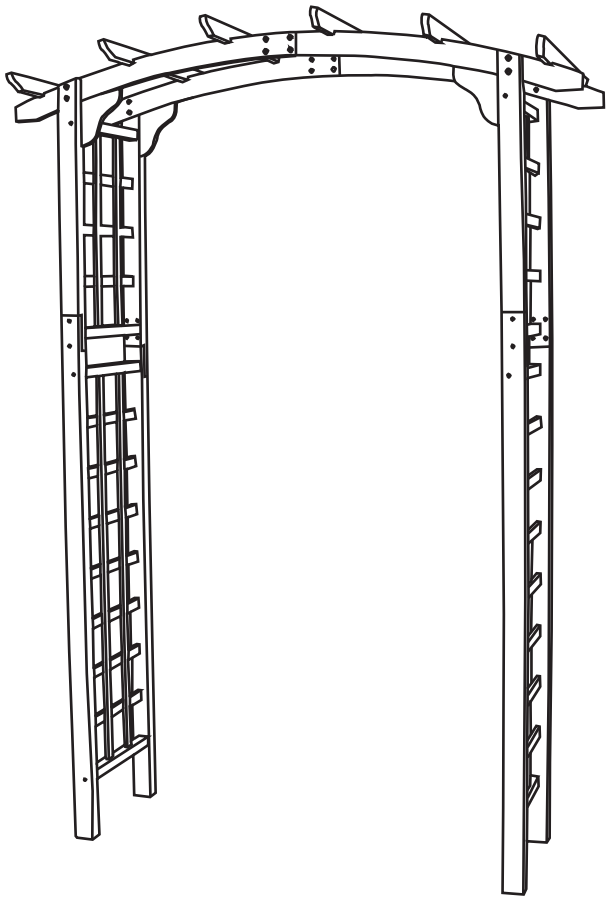

US

If you have any questions, please contact our customer care center, Our contact details are below:

001-877-644-9366

customerservice@aosom.com

Imported by Aosom LLC
7777 Center Ave. Suite 430
Huntington Beach, CA 92647-9998 USA
MADE IN CHINA

CA

If you have any questions, please contact our customer care center, Our contact details are below:

416-792-6088

customerservice@aosom.ca

Imported by Aosom Canada Inc.
Unit 33-1 Sparks Avenue, North York, Ontario, Canada
M2H 2W1
MADE IN CHINA

Si vous avez la moindre question, veuillez contacter notre centre d'assistance à la clientèle,Nos coordonnées sont les suivantes:

416-792-6088

customerservice@aosom.ca

Importé par Aosom Canada Inc.
Unité 33-1 Sparks Avenue, North York, Ontario, Canada M2H 2W1
Fabriqué en Chine

ES

Si tiene alguna pregunta, comuníquese con nuestro Centro de Atención al Cliente,Nuestros datos de contacto son los siguientes:

0034-931294512

atencioncliente@aosom.es

IMPORTADOR/Fabricante/REP:
SPANISH AOSOM, S.L.
C/ROC GROS,Nº15.08550, ELS HOSTALETS DE BALENYÀ, SPAIN.
B66295775
HECHO EN CHINA

Se tiver alguma dúvida, por favor contacte o nosso Centro de Atendimento ao Cliente,Os nossos dados de contacto são os seguintes:

0034-931294512

info@aosom.pt.

UK

If you have any questions, please contact our customer care center, Our contact details are below:

0044-800-240-4004

enquiries@mhstar.co.uk

IMPORTER ADDRESS:
MH STAR UK LTD
1 Northampton Cross Logistics Park
Northampton Cross Road
Northampton
Nn4 9FH
Tel: 0800 240 4050
enquiries@mhstar.co.uk
MADE IN CHINA

DE

Wenn Sie Fragen haben, wenden Sie sich bitte an unser Kundendienstzentrum,Unsere Kontaktdaten stehen unten:

0049-0(40)-87408465

service@aosom.de

ADRESSE DES IMPORTEURE/Hersteller/REP:
MH Handel GmbH
Wendenstraße 309
D-20537 Hamburg
Germany
IN CHINA HERGESTELLT

IT

In caso di dubbio, si prega di contattare il nostro centro assistenza clienti,I nostri dettagli di contatto sono di seguito:

0039-0249471447

clienti@aosom.it

IMPORTATO DA/Produttore/REP:
AOSOM Italy srl
Centro Direzionale Milanofiori
Strada 1 Palazzo F1
20057 Assago (MI)
P.I.: 08567220960
FATTO IN CINA

RO

Importator/Producător/REP:
Aosom Romania SRL
Str. Barbu Mumuleanu, nr. 30-32
Bucuresti, Sector 2
Tel: +40 312294730
clienti@aosom.ro
Fabricat in China

FR

Si vous avez la moindre question, veuillez contacter notre centre d'assistance à la clientèle,Nos coordonnées sont les suivantes:

0033-1-84166106

aosom@mhfrance.fr

Importé par/Fabricant/REP:
MH FRANCE
2 Rue Maurice Hartmann
92130 Issy Les Moulineaux
France
FABRIQUÉ EN CHINE



